LIFEBOOK T580

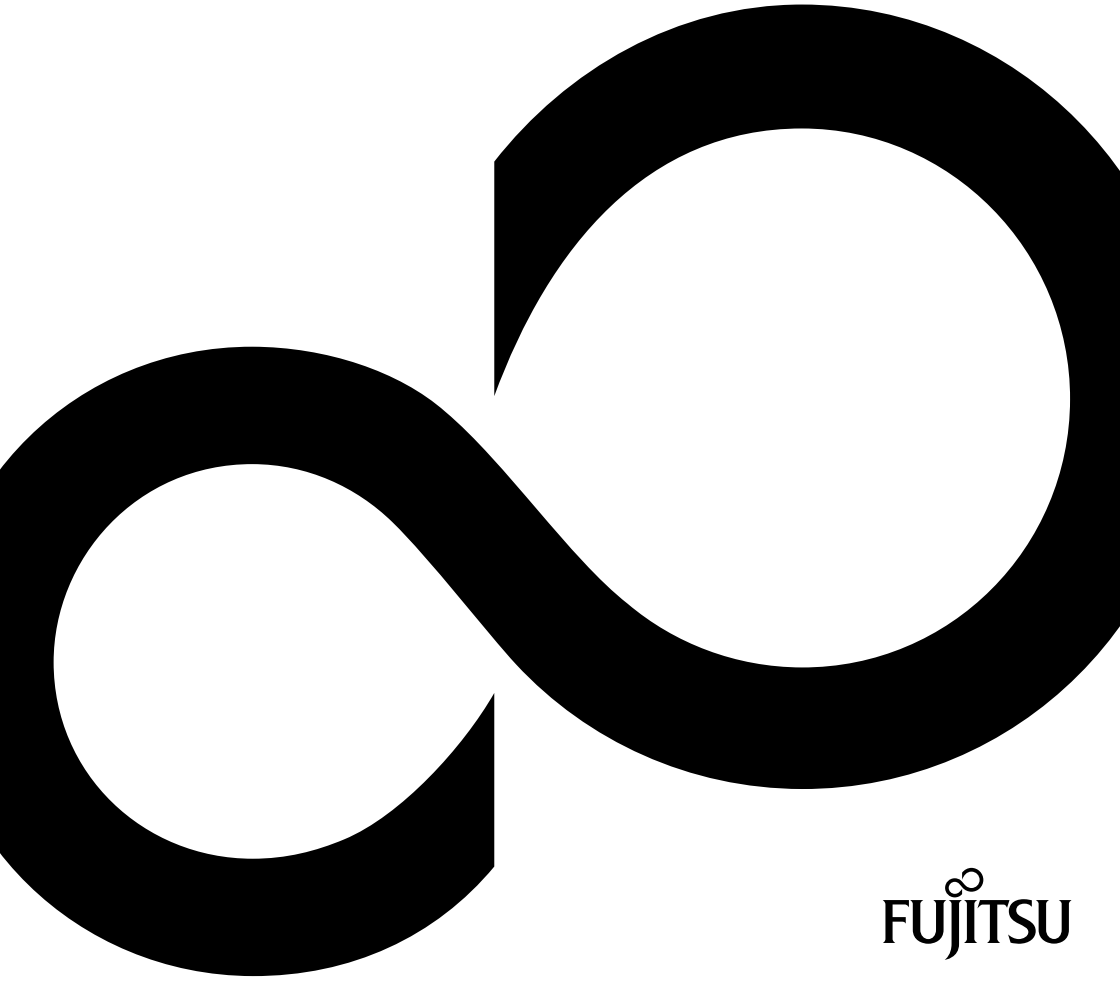

FUJITSU

Congratulations, you have decided to buy an innovative Fujitsu product.

The latest information about our products, useful tips, updates etc. is available from our website: "http://ts.fujitsu.com"

For automatic driver updates, go to: "http://support.ts.fujitsu.com/com/support/index.html"

Should you have any technical questions, please contact:

- our Hotline/Service Desk (see Service Desk list or visit: "http://ts.fujitsu.com/support/servicedesk.html")
- Your sales partner
- Your sales office

We hope you really enjoy using your new Fujitsu system.

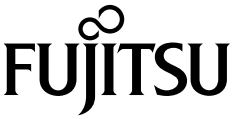

Copyright
Fujitsu Technology Solutions 2010 08/2010

Published by
Fujitsu Technology Solutions
Mies-van-der-Rohe-Straße 8 (Mies-van-der-Rohe Street No. 8)
80807 Munich, Germany

Contact
http://ts.fujitsu.com/support

All rights reserved, including intellectual property rights. Subject to technical alterations. Delivery subject to availability. No warranty is offered or liability accepted in regard of the completeness, correctness, or current applicability of any data or illustrations. Brand names may be protected trademarks of the respective manufacturer and/or protected by copyright. Use of these by third parties for their own purposes may constitute an infringement of the holders' rights. Further information can be found at "http://ts.fujitsu.com/terms_of_use.html"

Order No. Fujitsu Technology Solutions GmbH: A26391-K318-Z320-1-7619, edition 1

LIFEBOOK T580

Operating Manual

Innovative technology	**7**
Ports and controls	**9**
Important notes	**12**
First-time setup of your device	**15**
Working with the notebook	**19**
Security functions	**65**
Connecting external devices	**85**
Removing and installing components during servicing	**90**
Settings in BIOS Setup Utility	**96**
Troubleshooting and tips	**98**
Technical data	**106**
Manufacturer's notes	**109**
Index	**116**

Microsoft, MS, Windows XP and Windows 7 are registered trademarks of the Microsoft Corporation.

Adobe Reader is a trademark of Adobe Systems Incorporated.

MultiMediaCard is a registered trademark of Infineon Technologies AG

Sony and Memory Stick are registered trademarks of Sony Electronics, Inc.

All other trademarks referenced are trademarks or registered trademarks of their respective owners, whose protected rights are acknowledged.

Copyright © Fujitsu Technology Solutions GmbH 2010
All rights reserved, including rights of translation, reproduction by printing, copying or similar methods, in part or in whole.

In the event of violations, perpetrators will be liable to prosecution for damages.

All rights reserved, including rights created by patent grant or registration of a utility model or design.

Subject to availability and technical modifications.

Contents

Innovative technology **7**
Further information 7
Notational conventions 8

Ports and controls **9**

Important notes **12**
Safety notes 12
Energy saving 12
Energy saving under Windows 12
Travelling with your notebook 13
Before you travel 13
Transporting the notebook: 13
Cleaning the notebook 14

First-time setup of your device **15**
Unpacking and checking the device 15
Selecting a location 16
Mains adapter connecting 16
Switching on the device for the first time 17

Working with the notebook **19**
Status indicators 19
Opening the notebook 21
Switching on the notebook 22
Programming the ON/OFF switch 22
Different ways to use your notebook 23
From notebook to Tablet PC 24
Select display orientation (portrait or landscape orientation) 25
From Tablet PC to notebook 26
Switching off the notebook 27
Closing the notebook 28
Handwriting recognition under Windows XP Tablet PC 2005 Edition 28
Handwriting recognition under Windows 7 28
LCD screen 29
Ambient light sensor 29
Using the device as a Tablet PC 30
Using fingers 30
Using the stylus pen 40
Using the device as a notebook 45
Touchpad and touchpad buttons 45
Keyboard 47
Virtual numeric keypad 49
Country and keyboard settings 49
Key combinations 50
Tablet buttons 52
Webcam 53
Rechargeable battery 54
Charging, caring for and maintaining the battery 54
Removing and installing the battery 55
Using the power-management features 57
Memory cards 58

Supported format ... 58
Inserting the memory card ... 58
Removing the memory card ... 59
Loudspeaker and microphone ... 59
SIM card ... 60
Inserting the SIM card ... 60
Removing a SIM card ... 61
Wireless LAN / Bluetooth / UMTS ... 62
Switching the wireless components on and off ... 62
Setting up WLAN access ... 63
Access via UMTS ... 63
Ethernet and LAN ... 64

Security functions ... 65
Brief overview of security functions ... 66
Configuring the fingerprint sensor ... 67
Use Kensington Lock ... 67
Configuring password protection in BIOS Setup Utility ... 68
Protecting BIOS Setup Utility (supervisor and user password) ... 68
Password protection for booting of the operating system ... 69
SmartCard reader ... 70
Inserting the SmartCard ... 70
SmartCard SystemLock (optional) ... 71
Access rights of SmartCards ... 72
SmartCard user groups ... 73
Installing SystemLock ... 74
Setting up the first system in a user group or a stand-alone system for use with SystemLock ... 74
Adding a system to a user group ... 77
Carrying out administrator functions ... 79
Remote Access Enabling – F4 ... 81
Switch on the device using SystemLock ... 82
Start BIOS Setup F2 ... 82
Changing PIN ... 82
Uninstall SystemLock ... 82
Error messages ... 83
Trusted Platform Module - TPM (optional) ... 83
Enabling TPM ... 84
Disabling TPM ... 84

Connecting external devices ... 85
Connecting an external monitor ... 86
HDMI port ... 87
Connecting USB devices ... 88
How to remove USB devices correctly ... 88
Connecting external audio devices ... 89
Microphone port / Line In ... 89
Headphone port ... 89

Removing and installing components during servicing ... 90
Notes on installing and removing boards and components ... 90
Preparing to remove components ... 91
Installing and removing memory expansion ... 91
Removing a cover ... 92

Removing memory modules ... 92
Installing a memory module ... 93
Attaching the cover ... 93
Removing and installing the hard disk ... 94
Removing a hard disk ... 94
Installing a hard disk ... 95
Finishing component removal ... 95

Settings in BIOS Setup Utility ... 96
Starting the BIOS Setup Utility ... 96
Operating BIOS Setup Utility ... 96
Exiting BIOS Setup Utility ... 97
Exit Saving Changes - save changes and exit BIOS Setup Utility ... 97
Exit Discarding Changes – Discard changes and exit BIOS Setup Utility ... 97
Load Setup Defaults – Copy Standard Entries ... 97
Discard Changes – Discard changes without exiting the BIOS Setup Utility ... 97
Save Changes - save changes without exiting the BIOS Setup Utility ... 97
Save Changes and Power Off ... 97

Troubleshooting and tips ... 98
Help if problems occur ... 99
Restoring the hard disk contents under Windows ... 99
The notebook's date or time is incorrect ... 100
Battery indicator does not illuminate ... 100
When certain characters are entered on the keyboard, only numerals are written ... 100
The notebook's LCD screen remains blank ... 100
The LCD screen is difficult to read ... 101
The external monitor remains blank ... 101
The external monitor is blank or the image is unstable ... 101
The cursor does not correctly follow the pen movements ... 102
The notebook cannot be started ... 102
The notebook stops working ... 103
The printer does not print ... 103
The radio connection to a network does not work ... 103
The battery discharges too quickly ... 104
Acoustic warnings ... 104
Error messages on the screen ... 104

Technical data ... 106
Notebook ... 106
Rechargeable battery ... 107
Mains adapter ... 108

Manufacturer's notes ... 109
Energy Star ... 109
Disposal and recycling ... 109
Declarations of Conformity ... 109
CE marking ... 110
Regulatory notices ... 110
Regulatory information for notebooks without radio device ... 110
DOC (Industry CANADA) notices ... 112
FCC regulatory information for notebooks with radio device ... 114

Index ... 116

Innovative technology

... and ergonomic design make your device a reliable and convenient companion.

The device boots very quickly, is ready for immediate use and offers a particularly long operating time because of its high capacity battery.

With the user-friendly "BIOS Setup Utility" you can control your notebook's hardware and better protect your system against unauthorised access by using the powerful password properties.

Information on the connections and user components of your notebook can be found in "Ports and controls", Page 9.

Further information

The Windows drivers for your device can be found on our Internet site. The factory installation of your device does not support any other operating system. Fujitsu Technology Solutions accepts no liability whatsoever if any other operating system is used.

Software oriented components of these instructions refer to Microsoft products, if they come within the scope of the delivery.

If you install other software products, pay attention to the operating instructions of the manufacturer.

Notational conventions

	Pay particular attention to text marked with this symbol. Failure to observe these warnings could pose a risk to health, damage the device or lead to loss of data. The warranty will be invalidated if the device becomes defective through failure to observe these warnings.
	Indicates important information for the proper use of the device.
►	Indicates an activity that must be performed
↳	Indicates a result
`This font`	indicates data entered using the keyboard in a program dialogue or at the command line, e.g. your password (**`Name123`**) or a command used to start a program (**`start.exe`**)
`This font`	indicates information that is displayed on the screen by a program, e.g.: `Installation is complete.`
This font	indicates • terms and texts used in a software interface, e.g.: Click on *Save* • names of programs or files, e.g. *Windows* or *setup.exe*.
"This font"	indicates • cross-references to another section, e.g. "Safety information" • cross-references to an external source, e.g. a web address: For more information, go to "http://ts.fujitsu.com" • Names of CDs, DVDs and titles or designations of other materials, e.g.: "CD/DVD Drivers & Utilities" or "Safety" Manual
Key	indicates a key on the keyboard, e.g: F10
This font	indicates terms and texts that are emphasised or highlighted, e.g.: **Do not switch off the device**

Ports and controls

This chapter presents the individual hardware components of your device. It gives an overview of the displays and connections of the device. Please familiarise yourself with these components before you start to work with the device.

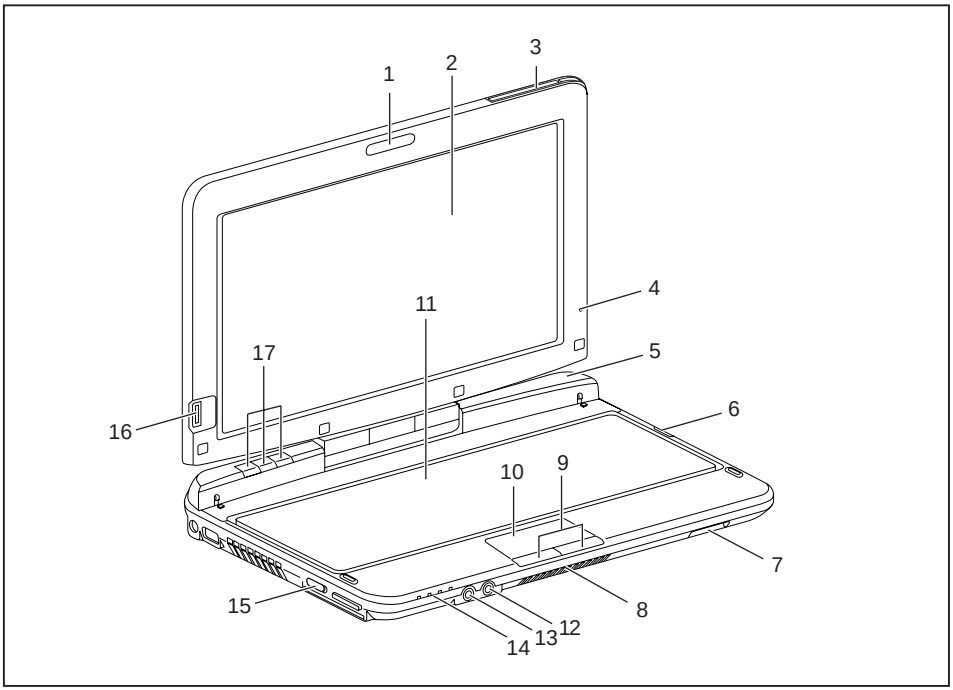

1 = Webcam
2 = LCD screen for use with the pen and with TouchScreen functionality
3 = UMTS antenna
4 = Ambient light sensor
5 = Microphone
6 = ON/OFF switch
7 = Pen release lever
8 = Loudspeaker
9 = Touchpad buttons
10 = Touchpad
11 = Keyboard
12 = Microphone jack
13 = Headphone port
14 = Status indicators
15 = ON/OFF switch for wireless components
16 = Fingerprint sensor
17 = Tablet buttons

Left panel

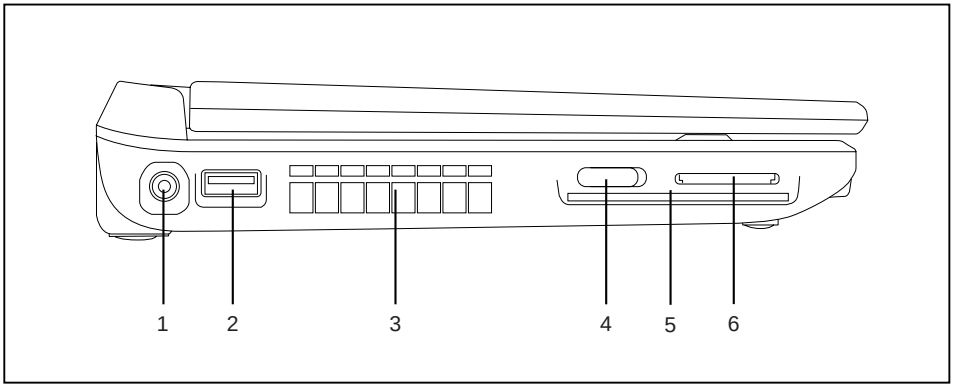

1 = DC input connector (DC IN)
2 = USB port
3 = Fan-air-outlet
4 = ON/OFF switch for wireless components
5 = SmartCard slot
6 = Memory card slot

Right-hand side

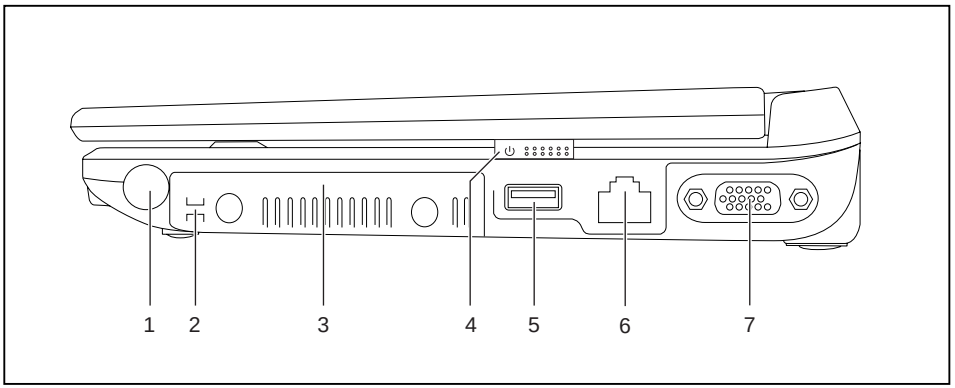

1 = Pen slot
2 = Eyelet for pen cord
3 = Hard disk service compartment
4 = ON/OFF switch
5 = USB port
6 = LAN port
7 = VGA monitor port

Rear

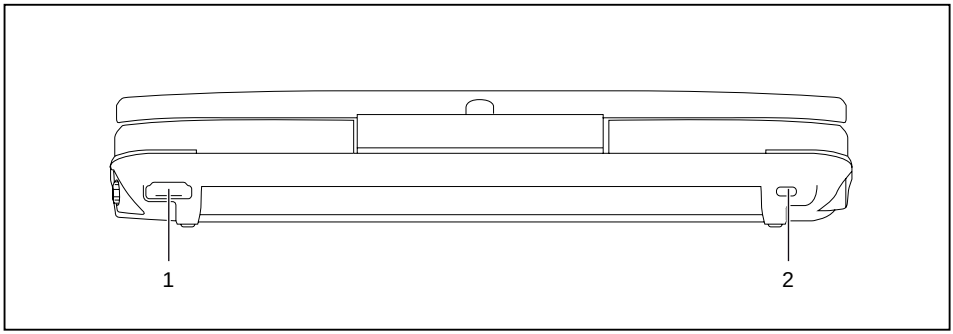

1 = HDMI port

2 = Kensington Lock

Underside

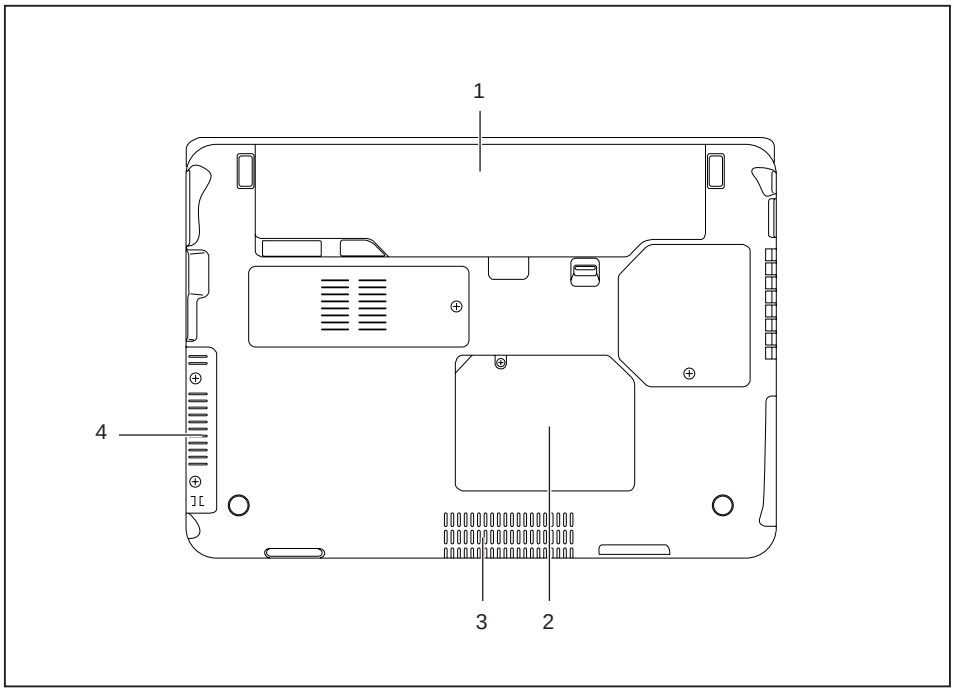

1 = Battery with SIM card slot under the battery

2 = Memory service compartment

3 = Loudspeaker

4 = Hard disk service compartment

Important notes

This chapter contains essential safety information which must be followed when working with your notebook. Other notes also provide useful information which will help you with your notebook.

Safety notes

Please note the information provided in the "Safety" manual and in the following safety notes.

Please pay special attention to the sections in the manual marked with the symbol on the left.

When connecting and disconnecting cables, observe the relevant notes in this operating manual.

Read the information on the ambient conditions in the "Technical data", Page 106 and "First-time setup of your device", Page 15 before preparing your notebook for use and switching it on for the first time.

When cleaning the device, please observe the relevant notes in the section "Cleaning the notebook", Page 14.

Pay attention to the additional safety notes for devices with wireless components provided in the "Safety" manual.

Please refer to the notes in the chapter "Removing and installing components during servicing", Page 90.

This notebook complies with the relevant safety regulations for data processing equipment. If you have questions about using your notebook in a particular area, please contact your sales outlet or our Hotline/Service Desk.

Energy saving

Switch the notebook off when it is not in use. Switch off external, connected devices if you are not using them. If you use the energy saving functions, the notebook uses less energy. You will then be able to work for longer before having to recharge the battery.

Energy efficiency is increased and the environmental impact is reduced. You save money while protecting the environment.

Energy saving under Windows

► Make use of the power management features (see ""Using the power-management features", Page 57").

Travelling with your notebook

Please observe the points listed below when travelling with your notebook.

Before you travel

- ► Back up important data stored on your hard disk.
- ► Switch off the radio component for data security reasons. With data traffic via a wireless connection, it is also possible for unauthorised third parties to receive data.

Information on activating data encryption is provided in the documentation for your radio component.

- ► If you wish to use your notebook during a flight, first check with the flight attendants if it is OK to do so.

When travelling in other countries

- ► If you are travelling abroad, check that the mains adapter can be operated with the local mains voltage. If this is not the case, obtain the appropriate mains adapter for your notebook. Do not use any other voltage converter!
- ► Check whether the local mains voltage and the power cable are compatible. If this is not the case, buy a power cable that matches the local conditions.
- ► Enquire with the corresponding government office of the country you will be travelling in as to whether you may operate the radio component integrated in your notebook there (see also "CE marking", Page 110).

Transporting the notebook:

Protect the notebook from severe shocks and extreme temperatures (e.g. direct sunlight in a car).

- ► Switch the notebook off.
- ► Unplug the mains adapter and all external devices from the power socket.
- ► Disconnect the mains adapter cable and the data cables for all external devices.
- ► Close the LCD screen.
- ► To protect against damaging jolts and bumps, use a notebook carrying case to transport your notebook.

Cleaning the notebook

Do not clean any interior parts yourself; leave this job to a service technician.

Only use cleaning products designed for computers. Normal household cleaners and polishes can damage the markings on the keyboard and the device, the paintwork or the notebook itself.

Ensure that no liquid enters the notebook.

The LCD screen very sensitive to scratches. Only clean the display surface with a very soft, slightly damp cloth.

► Switch the notebook off.

► In order to prevent accidentially switching the device on, remove the power cable from the mains adaptor and remove the battery (see "Removing and installing the battery", Page 55).

↳ The surface can be cleaned with a dry cloth. If particularly dirty, use a cloth which has been moistened in mild domestic detergent and then carefully wrung out.

To clean the keyboard and the touchpad, if available, you can use disinfectant wipes.

Ensure that no liquid enters the device.

First-time setup of your device

Please read the chapter "Important notes", Page 12.

If your device is equipped with a Windows operating system, the necessary hardware drivers and supplied software are already pre-installed.

Before you switch on the device for the first time, connect it to the mains voltage using the mains adapter, see "Mains adapter connecting", Page 16. The mains adapter must be connected during the entire installation process.

A system test is performed when your device is first switched on. Various messages can appear. The display may remain dark for a short time or may flicker.

Please follow the instructions on the screen.

NEVER switch off your device during the first-time setup process.

On delivery, the battery can be found in the battery compartment or in the accessories kit. The battery must be charged if you want to operate your device using the battery.

When used on the move, the built-in battery provides the device with the necessary power. You can increase the operating time by using the available energy-saving functions.

For instructions on how to connect external devices (e.g. mouse, printer) to your device, please refer to the operating manual for your device.

Unpacking and checking the device

Should you discover any damage that occurred during transportation, notify your local sales outlet immediately!

- ► Unpack all the individual parts.
- ► Check your device for any visible damage which may have occurred during transportation.

You may need the packaging in the future, if you need to transport your device.

Selecting a location

Select a suitable location for the device before setting it up. Follow the instructions below when doing so:

- Never place the device or the mains adapter on a heat-sensitive surface. The surface could be damaged as a result.
- Never place the device on a soft surface (e.g. carpeting, upholstered furniture, bed). This can block the air vents and cause overheating and damage.
- The underside of the device heats up during normal operation. Prolonged contact with the skin may become unpleasant or even result in burns.
- Place the device on a stable, flat, non-slippery surface. Please note that the rubber feet of the device may mark certain types of delicate surfaces.
- Keep other objects at least 100 mm away from the device and its mains adapter to ensure adequate ventilation.
- Never cover the ventilation slots of the device.
- Do not expose the device to extreme environmental conditions. Protect the device from dust, humidity, and heat.

Mains adapter connecting

Observe the safety precautions in the enclosed "Safety" manual.

The supplied power cable conforms to the requirements of the country in which you purchased your device. Make sure that the power cable is approved for use in the country in which you intend to use it.

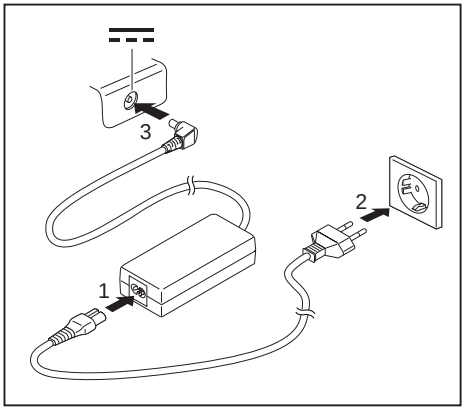

- ► Connect the power cable (1) to the mains adapter.
- ► Plug the mains cable (2) into a mains outlet.
- ► Connect the mains adapter cable (3) to the DC jack (DC IN) of the device.

Switching on the device for the first time

On devices with ON/OFF switch for wireless components: Slide the ON/OFF switch for wireless components to the ON position before switching on the device.

Your device is equipped with a ON/OFF switch for wireless components.

When you switch on the device for the first time, the supplied software is installed and configured. Because this procedure must not be interrupted, you should set aside enough time for it to be fully completed and connect the device to the mains using the mains adapter.

During the installation process, DO NOT restart the device unless you are requested to do so!

To make it easier to use your device for the first time, the operating system is pre-installed on the hard disk.

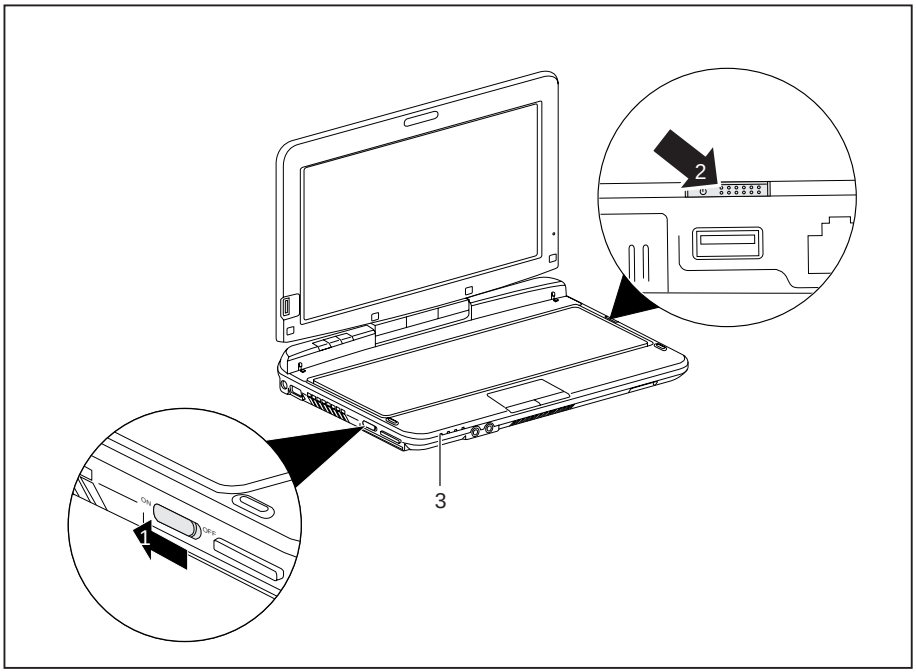

- ► Slide the ON/OFF switch for wireless components (1) towards the display to activate the wireless components for the installation.
- ► Slide the ON/OFF switch (2) towards the display to switch on the notebook.
- ↳ The ON/OFF switch returns automatically to its original position. The power-on indicator (3) flashes.
- ► During installation, follow the instructions on screen.

If a Windows operating system is installed on your device, you will find more information on the system and drivers, help programmes, updates, manuals etc. on the device or on the Internet at "http://ts.fujitsu.com/support".

Working with the notebook

This chapter describes the basics for operating your notebook. Please read the chapter entitled "Connecting external devices", Page 85 for instructions on how to connect devices such as a mouse and a printer to the notebook.

Please refer to the notes in "Important notes", Page 12.

Status indicators

The status indicators provide information about the status of the power supply, the drives and the keyboard functions etc.

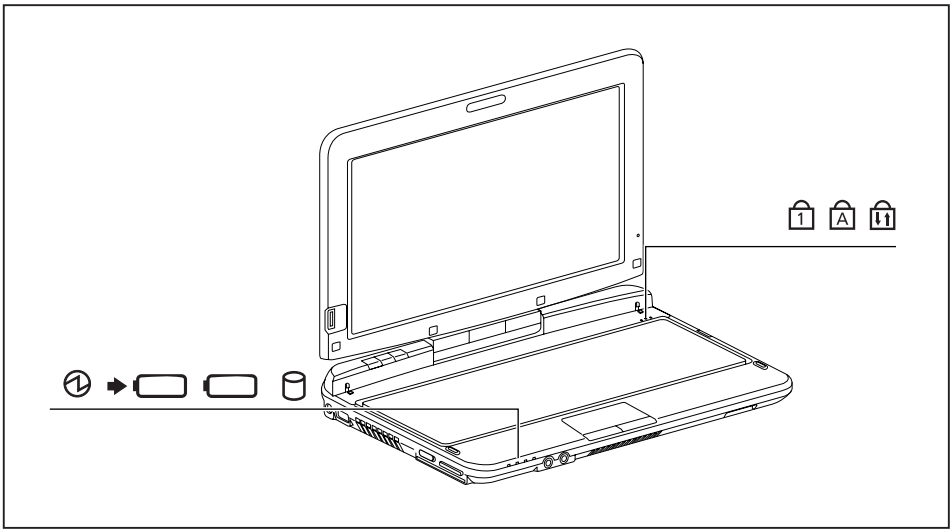

Status displays	Description
	Power-on indicator • Indicator is illuminated: The notebook is switched on. • Indicator flashes: The notebook is in sleep mode (Save-to-RAM). • The indicator is not illuminated: The notebook is switched off or in Save-to-Disk mode.
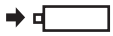	**Battery charging indicator** The battery charging indicator shows whether a battery is installed and being charged. • The indicator is lit green: AC power supplied, battery charge completed. • The indicator is lit orange: AC power supplied, battery charge on the way. • The indicator flashes orange: AC power supplied, error while battery charge. • The indicator is not lit: No AC power supplied.
	Battery indicator The battery indicator shows the state of charge of the installed battery. • The indicator is lit green: The battery is between 50 % and 100 % charged. • The indicator is lit orange: The battery is between 13 % and 49 % charged. • The indicator is lit red: The battery is between 0 % and 12 % charged. • The indicator flashes orange: The battery state of charge is being checked (for four seconds after battery installation). • The indicator flashes red: The battery is faulty. • The indicator is not lit: There is no battery installed.
	Drive indicator The indicator is illuminated: The hard disk drive of the notebook is being accessed.
	Num Lock indicator Indicator is lit: The Num key has been pressed. The virtual numerical keypad is activated. You can output the characters indicated on the upper right of the keys.
	Caps Lock indicator The indicator is illuminated: The Caps Lock key has been pressed. All letters are output as capital letters. In the case of overlay keys, the character printed on the upper left of the key will appear when that key is pressed.
	Scroll Lock indicator Indicator is lit: The key combination Fn + Scr has been pressed. The effect that this key has varies between applications.

Opening the notebook

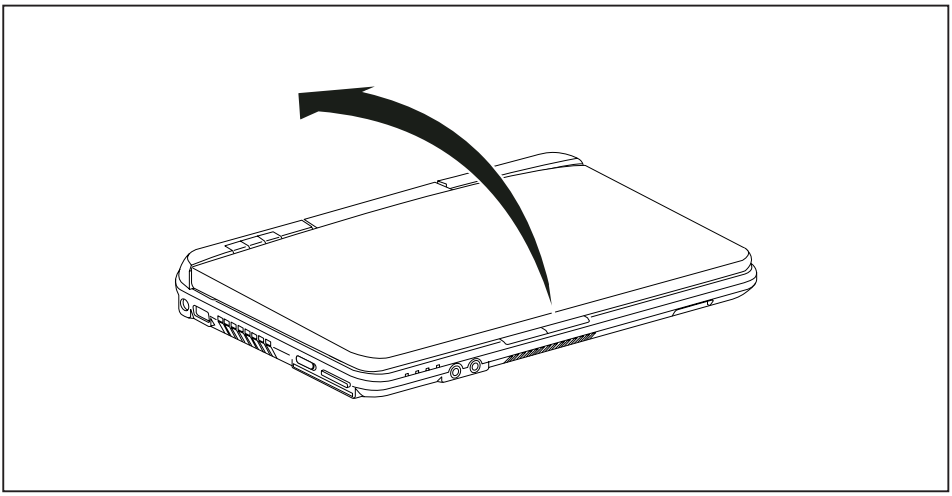

► Open the LCD screen.

Switching on the notebook

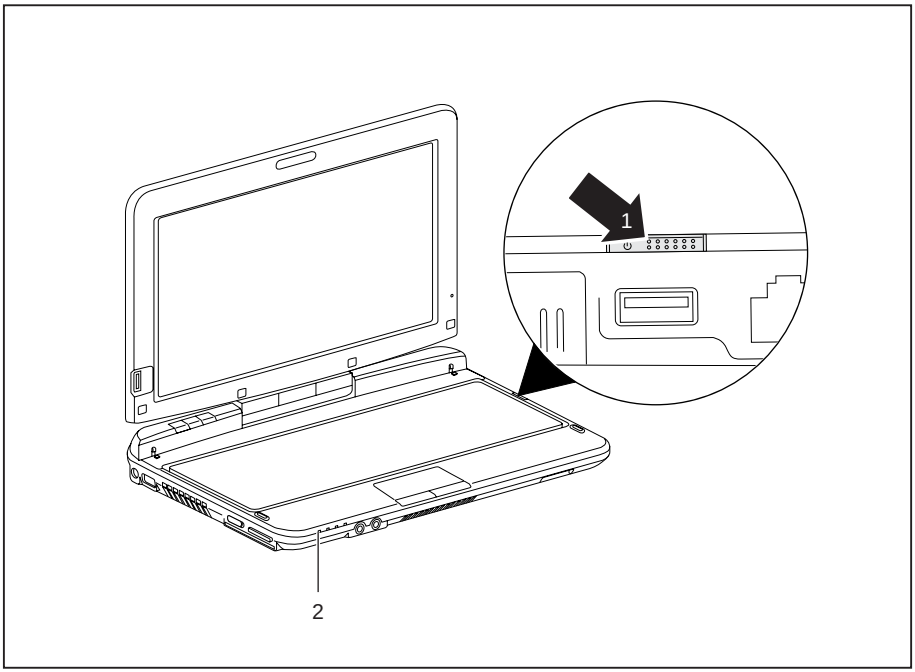

► Slide the ON/OFF switch (1) towards the display to switch on the notebook.
↳ The ON/OFF switch automatically returns to its starting position.
The power-on indicator (2) lights.

Programming the ON/OFF switch

You can program the ON/OFF switch:

Operating system	Menu
Windows XP	*Start - (Settings) - Control panel - Performance and Maintenance - Power options - Advanced*
Windows 7	*Start - (Settings) - Control panel - System and Security - Power options*

If you have assigned a password, you must enter this when requested to do so, in order to start the operating system. Detailed information can be found in the chapter "Security functions", Page 65.

Different ways to use your notebook

During your daily work, you can use your notebook as a tablet PC or as a notebook, just as you wish. The "conversion" is lightning fast and effortless.

Note the direction of rotation in the following description! No guarantee claims can be met for damage caused by turning in the wrong direction.

You must note that the display cannot be turned completely on its own axis!

From notebook to Tablet PC

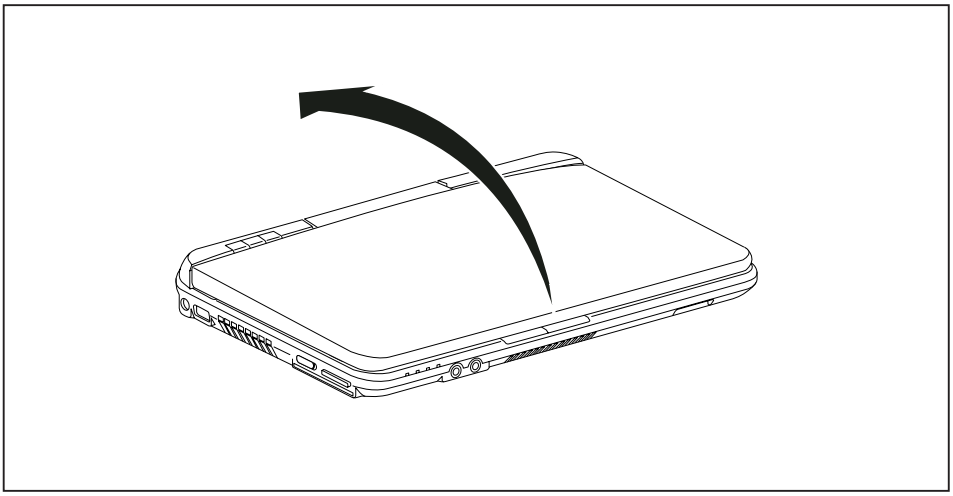

► Raise the screen into a vertical position.

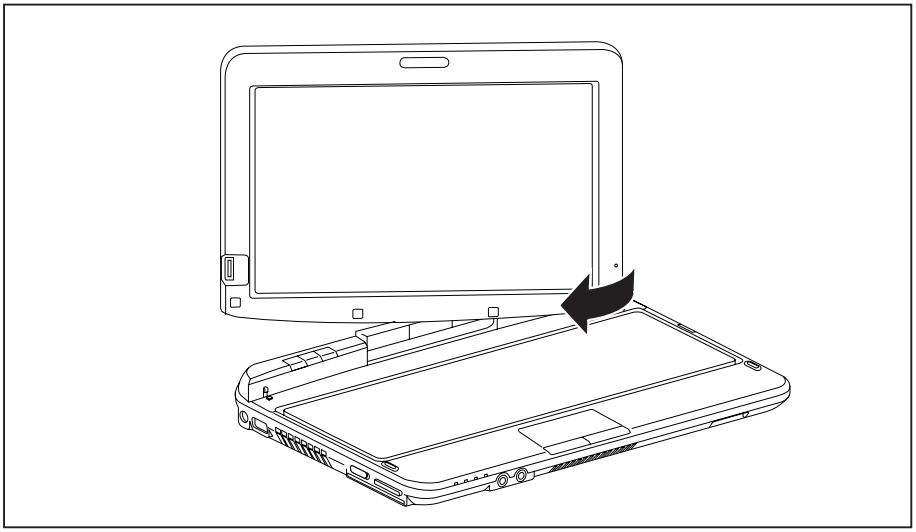

► Hold the screen as low as possible on both sides. Turn the screen to the left or right in the direction of the arrow. At first you will feel some slight resistance, then it will turn easily and without friction.

► Rotate the display further until it has turned 180° and the hinge latches in.

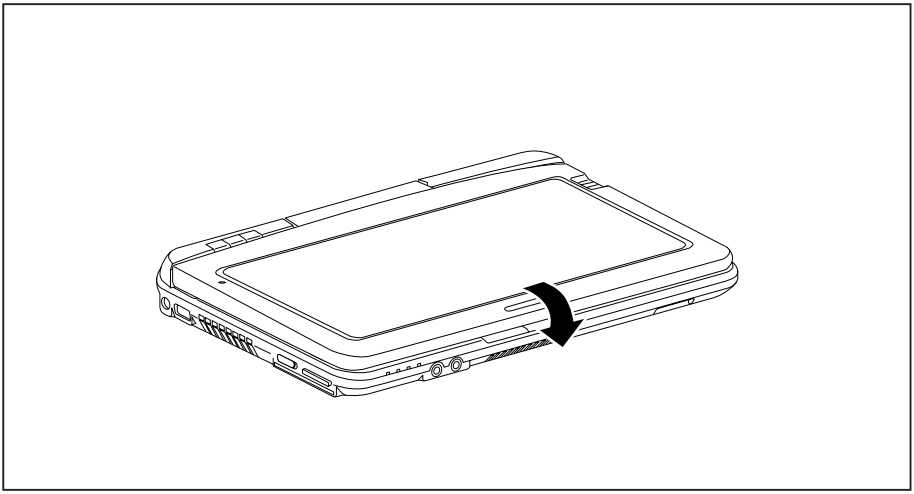

► Now fold the screen down until the back of the screen is flat on top of the keyboard.
↳ The screen is now secured in the tablet position.

Select display orientation (portrait or landscape orientation)

You can choose to use either portrait or landscape orientation for the display. Press the Tablet button to switch from one display orientation to the other.

The display switches automatically to portrait layout when the device is used as a Tablet PC and to landscape layout when it is used as a notebook.

Windows XP

You can change these settings in the Fujitsu menu or under *Start* - (*Settings* -) *Control Panel* - *Tablet and Pen Settings*.

Windows 7

You can change these settings in the Fujitsu menu or under *Start* - (*Settings* -) *Control Panel* - *Hardware and Sound* - *Display* - *Settings*.

Profiles for operating in different screen orientations are found under *Fujitsu Tablet Control* in the Fujitsu menu. These profiles have preset standard configurations that can be modified as desired.

These settings not only affect the monitor settings on the Tablet PC, but also any external monitors that may be connected.

From Tablet PC to notebook

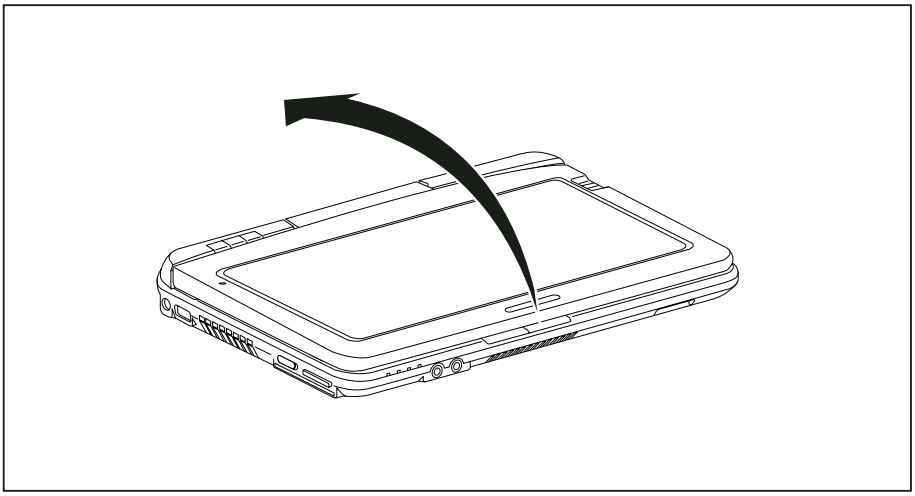

► Raise the display into a vertical position.

Note the direction of rotation in the following description! No guarantee claims can be met for damage caused by turning in the wrong direction.

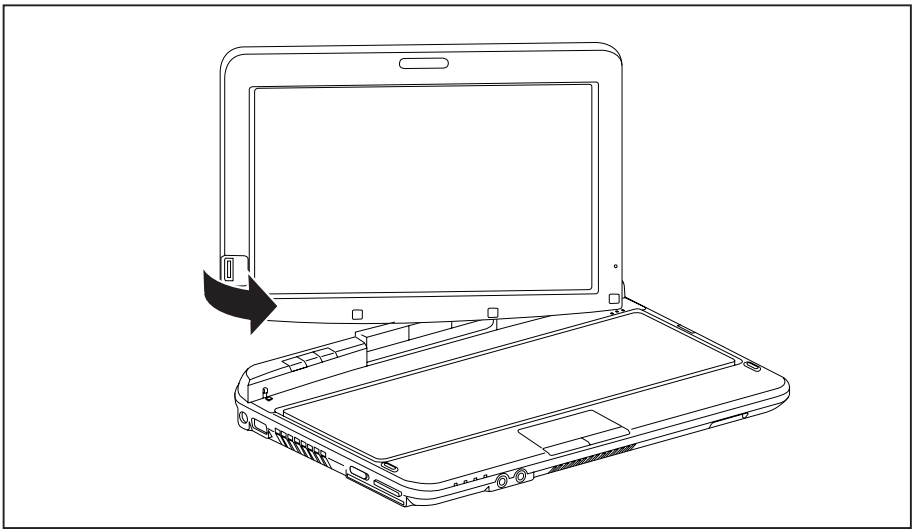

► Hold the display on both sides as far down as possible and then turn the display. It turns easily and without resistance.

► Turn or move the display further until it has turned 180° and the hinge latches in.

↳ You can now close the notebook as usual.

Switching off the notebook

► Close all applications and then shut down the operating system (please see the "Operating System Manual").

► Slide the ON/OFF switch towards the right.

↳ The ON/OFF switch returns automatically to its original position.

Closing the notebook

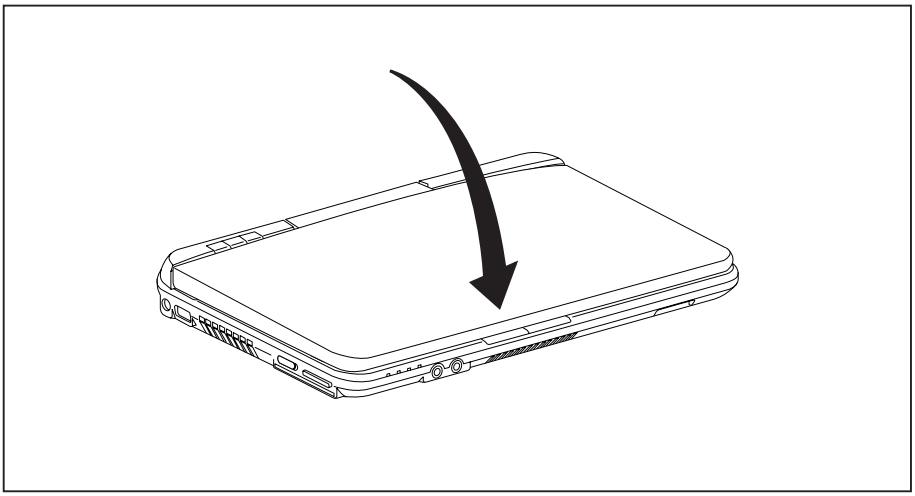

► Fold the LCD screen down onto the lower part of the notebook until you feel it lock into place.

Handwriting recognition under Windows XP Tablet PC 2005 Edition

► Click on *Control Panel – Date, Time, Language and Regional Options – Language and Regional options.*

► Select the *Languages* tab.

► In the *Text services and input languages* field, click on the *Details* button.

► In the next dialog window, select the *Settings* register card and click the *Add* button in the *Installed Services* field.

► In the next dialog window, select the desired *Input area schema*.

↳ You can now decide which functions (keyboard layout, handwriting recognition, etc.) the selected input area schema is to be activated for.

► Mark the desired functions and then confirm your entries by clicking the *OK* button.

↳ You will find further information in the Windows XP Tablet PC 2005 Edition operating system help.

Handwriting recognition under Windows 7

Handwriting recognition under Windows 7 currently supports the following languages:

English, German, French, Italian, Japanese, Korean, Chinese (traditional and simplified), Dutch, Portuguese, Spanish, Brazilian, Norwegian (Bokmål and Nynorsk), Swedish, Finnish, Danish, Polish, Rumanian, Serbian (Cyrillic and Latin script), Catalan, Russian, Czech and Croatian.

LCD screen

High-quality TFT displays are installed in notebooks from Fujitsu Technology Solutions GmbH. For technical reasons, TFT monitors are manufactured for a specific resolution. An optimal, clear picture can only be ensured with the correct resolution intended for the relevant TFT monitor. A monitor resolution which differs from the specification can result in an unclear picture.

The screen resolution of the LCD monitor of your notebook is optimally set at the factory.

The standard of production techniques today cannot guarantee an absolutely fault-free screen display. A few isolated constant lit or unlit pixels (picture elements) may be present. The maximum permitted number of pixels faults is stipulated in the international standard ISO 9241-3 (Class II).

Example:

A monitor with a resolution of 1280 x 800 has 1280 x 800 = 1024000 pixels. Each pixel consists of three subpixels (red, green and blue), so there are almost 3 million subpixels in total. According to ISO 9241-3 (class II), a maximum of 2 light and 2 dark pixels and an additional 5 light or 10 dark subpixels or a corresponding mix may be defective (1 light subpixel counts as 2 dark subpixels).

Pixel	A pixel consists of 3 subpixels, normally red, green and blue. A pixel is the smallest element that can be generated by complete functionality of the display.
Subpixel	A subpixel is a separately addressable internal structure within a pixel that enhances the pixel function.
Cluster	A cluster contains two or more defective pixels or subpixels in a 5 x 5 pixel block.

Background lighting

TFT monitors are operated with background lighting. The luminosity of the background lighting can decrease during the period of use of the notebook. However, you can set the brightness of your monitor individually.

Synchronising the display on the LCD screen and an external monitor

For more information, please refer to the chapter "Key combinations", Page 50 under "Display output, switch between".

Ambient light sensor

If your notebook was shipped with the *Windows 7* operating system, the screen brightness is regulated by means of the ambient light sensor and depending on the respective light conditions. This results in optimum readability and longer battery life at the same time.

In delivery status, the ambient light sensor on your device is switched off. To switch the ambient light sensor on, select *Start - Control Panel - Positioning and other sensors - Ambient light sensor*.

Using the device as a Tablet PC

You can execute commands as follows:

- using your fingers
- using the stylus pen (supplied with your device)

Using fingers

You can execute certain commands by using your finger tip on the touchscreen of your device.

Everything which you can select or activate using your finger tip can also be selected or activated using the stylus pen.

Calibrate the Dual Digitizer for finger-based operation of the device

Before using the finger-based operation for the first time, you should calibrate it so that the finger tips are recognized as accurately as possible.

You should also always repeat the calibration if the co-ordination between your fingers and the operation on the screen deteriorates.

Operating system	Menu
Windows XP	To calibrate, run the *Tablet and Pen Settings* function in the Control Panel. You need to calibrate both portrait and landscape formats.
Windows 7	To calibrate, run the *Hardware and Sound / Tablet PC Settings* function in the Control Panel. You need to calibrate both portrait and landscape formats.

Actions with one finger

Action	Description
Selecting objects (click with the left mouse button)	► With your finger, tap once briefly on the object.
Starting programs (double-click with the left mouse button)	► With your finger, tap twice briefly in quick succssion on the program icon.
Moving objects/windows (drag with left mouse button pressed, Drag&Drop)	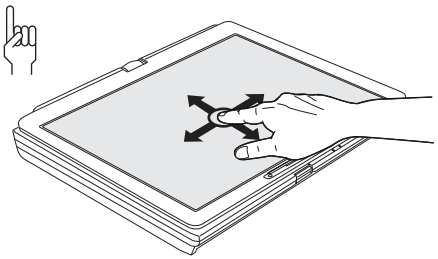 ► Position one finger on the object/window, hold your fingertip pressed against the touchscreen and move the desired object/window.
Opening a context menu (click with the right mouse button)	► Touch the desired item once with your finger tip. Hold your fingertip pressed against the touchscreen. The context menu appears.
Moving the cursor	► Position one finger on the touchscreen and move the finger in the desired direction.

Actions with two fingers

Action	Description
Scrolling	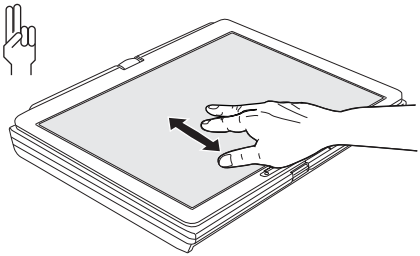 ► Position two fingers on the touchscreen. ► Move your fingers upwards to scroll up. or ► Move your fingers downwards to scroll down.
Rotating	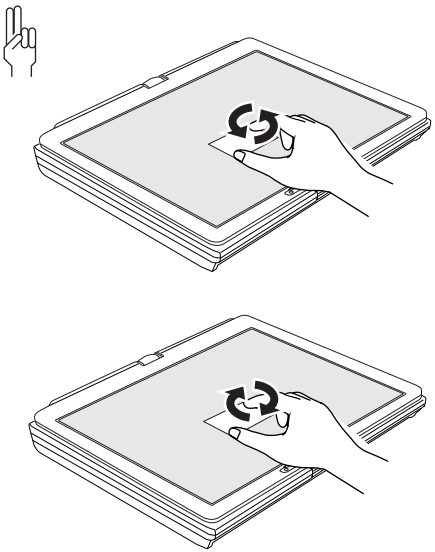 ► Position the thumb on the touchscreen, then turn the picture clockwise or counter-clockwise at the corners by using your index finger.

Action	Description
Zoom in / Zoom out	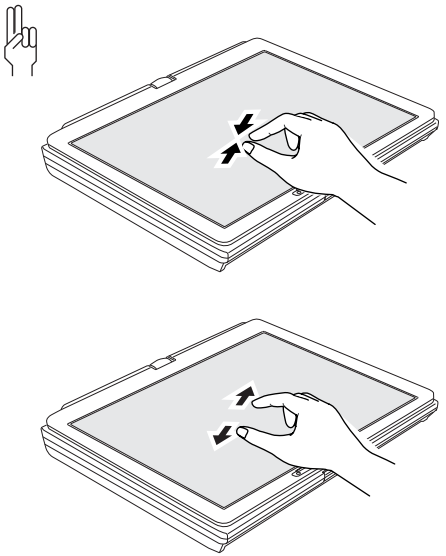 ► Position two fingers on the touchscreen and move them apart to increase the view. or ► Position two fingers on the touchscreen and move them together to decrease the view.
Blocking context-sensitive menus	► With two fingers, tap twice briefly in quick succession on the touchscreen.

Actions with three fingers

Action	Description
Maximising or minimising current window	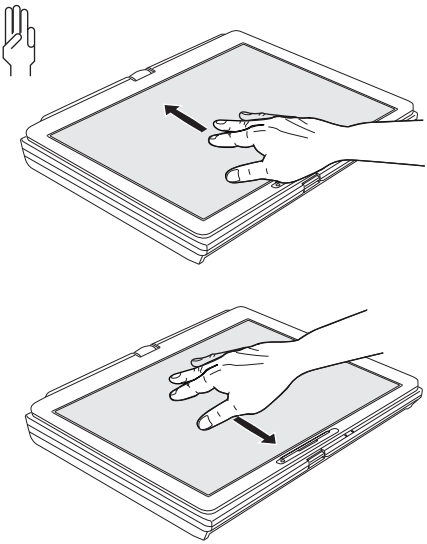 ► Position three fingers on the touchscreen and move them upwards to maximise the window. or ► Position three fingers on the touchscreen and move them downwards to minimise the window.

Action	Description
Displaying and rotating current window in 3D carousel layout	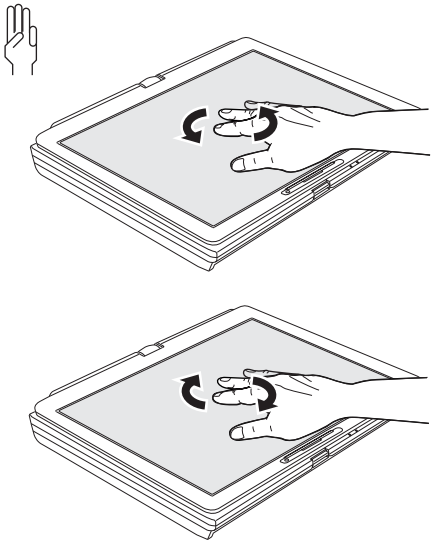 ► Tap the touchscreen with your three fingers to display the 3D carousel. ► Hold your fingertips pressed to change the 3D carousel layout.
Minimising all windows and displaying the desktop	► With three fingers, tap the touchscreen twice briefly in quick succession.

Action	Description
Scrolling through all open files in a program	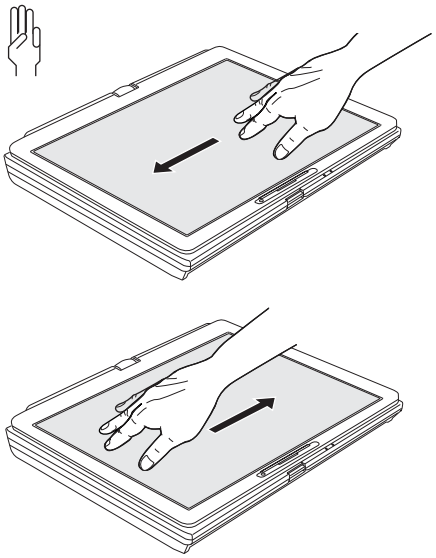 ► Position three fingers on the touchscreen and move them to the side (left or right) over the touchscreen.
Displaying context menu and selecting entry	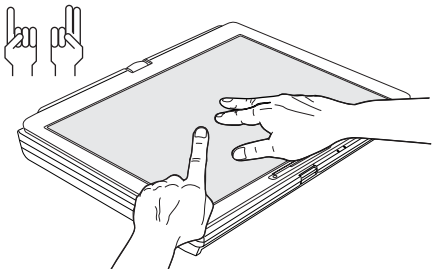 ► Position two fingers on the touchscreen. A context menu is displayed on the screen. ► With one finger on the other hand, tap on an entry in the context menu. The entry is selected.

Actions with four fingers

Action	Description
Displaying a menu with context-sensitive web applications with one hand. Selecting a word, sentence, paragraph or a item	► Tap briefly on the touchscreen with four fingers of one hand then lift your fingers from the screen. A menu with context-sensitive web applications is displayed.
Displaying menu with context-sensitive web applications with two hands	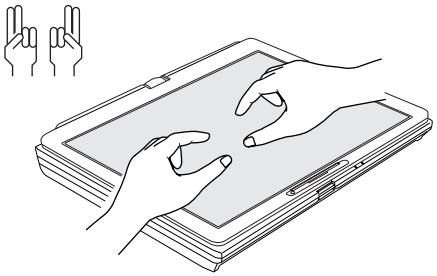 ► To select an area position two fingers on each hand on the touchscreen as shown in the rectangle. A menu with context-sensitive web applications is displayed.

Action	Description
Magnifying an area	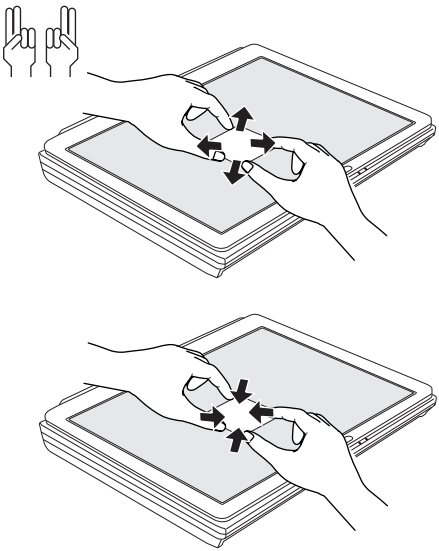 ► To magnify an area within a document, position two fingers on each hand on the touchscreen as shown in the rectangle. The selected area will be magnified. ► Use one finger to move the rectangle around the touchscreen to magnify the areas it moves over.

Action	Description
Leafing (fast scrolling)	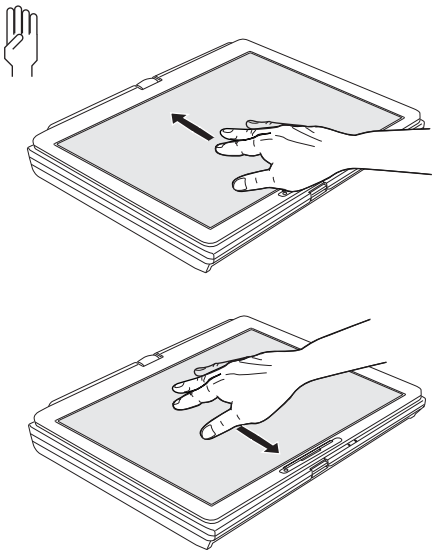 ► Position four fingers on the touchscreen and move them upwards to scroll up. or ► Position four fingers on the touchscreen and move them downwards to scroll down. The distance you sweep your fingers indicates how far you move up or down.

Using the stylus pen

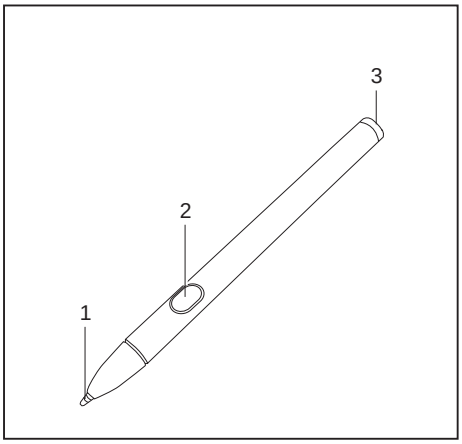

1 = pen tip

2 = pen button

3 = eyelet for pen cord

You can use the pen on your notebook as an electronic writing implement to select items and to navigate through menu options and programs. Programs that support handwriting recognition also allow you to write characters directly on the screen with the pen. You can also use the pen as a drawing tool.

The notebook pen is retained securely in the pen slot. This ensures that the pen cannot be lost, regardless of whether you use the notebook as a Tablet PC or as a notebook, or transport it while travelling. Always replace the pen in its slot when you are not using it.

The notebook is supplied with a pen cord which you can attach to the eyelets on the pen and on the notebook.

Only use the pen provided with your notebook. Do not use substitute pen tips that were not specially designed for your notebook. Replace the stylus tip if it is worn. The warranty does not cover a scratched screen.

While writing, you should take care not to scratch the surface of the display (e.g. with a wristwatch or bracelet).

The pen of your notebook is an electronic instrument which can be damaged if used incorrectly. Handle the pen with care.

The following list contains guidelines for proper pen handling:

- Do not gesture with the pen.
- Do not use the pen as a pointer.
- Never use the pen on any other surface than the screen of your notebook.
- Do not try to turn the thumb grip on the pen. The thumb grip is used to place the pen in its slot and to take it out of the slot.
- Never store the pen with the tip bearing the weight of the pen (e.g. with the tip down in a pen holder). If the pen is stored with the tip pointing down, this may have an adverse effect on the pen mechanism (particularly under high temperatures). In this case the pen tip may react as though it is constantly being pressed down. To avoid damage, the pen should be stored in the pen slot when not in use.

The pen can be influenced by electromagnetic fields (cursor quivers or jumps). There may be a few areas on the screen where the cursor quivers slightly in spite of pressing the pen down firmly.

The screen responds to entries made with the tip of the finger or the pen when the tip of the finger or the pen is in direct contact with the screen.

You can use the pen to perform all the functions for which you would otherwise use a mouse. In addition, you can conveniently delete hand-written pen entries using the pen.

The pen does not support erasing function.

Handling	Mouse	Pen
Selecting menu entries	Click with the left-hand mouse button. or Click with the right-hand mouse button.	Push the pen button.
Selecting menu entries	Click with the left-hand mouse button.	Touch the menu entry with the pen tip.
Starting programs	Double click with the left-hand mouse button.	Briefly touch the program icon twice with the pen tip.
Moving objects/windows	Drag with the left-hand mouse button held pressed.	Place the pen tip directly on the object/window. Hold the pen tip pressed against the screen. Move the desired object/window.
Opening a context menu	Click with the right-hand mouse button.	Touch the desired element with the pen and leave the pen on the element for a moment.
Moving the cursor	-	Place the pen tip directly on the screen.

Setting the pen

Operating system	Menu
Windows XP	You can access the various pen settings (for instance the pressure sensitivity) under *Fujitsu Pen Settings* or *Tablet and Pen Settings* in the Control Panel.
Windows 7	Under *Hardware and Sound – Pen and Input Devices* in the Control Panel you can change various settings for the pen (assignment and function of the rocker button).

Calibrating the pen

Before using the pen for the first time, you should calibrate it so that the cursor follows the movements of the pen as accurately as possible. You should also always repeat the calibration if the co-ordination between the pen and cursor movement deteriorates.

Operating system	Menu
Windows XP	To calibrate, run the *Tablet and Pen Settings* function in the Control Panel. You need to calibrate both portrait and landscape formats.
Windows 7	To calibrate, run the *Hardware and Sound / Tablet PC Settings* function in the Control Panel. You need to calibrate both portrait and landscape formats.

Removing the pen battery

Do not remove the tip of the pen for changing the battery.

The pen contains one AAAA-battery.

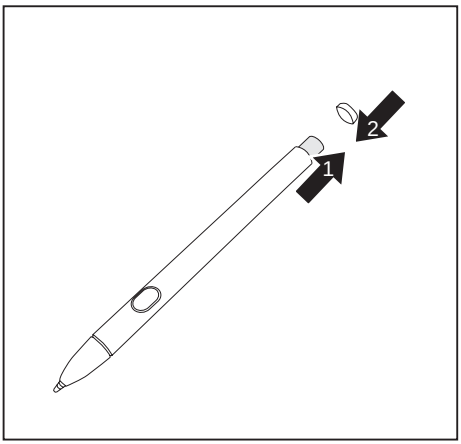

- ► Remove the rear pen cap.
- ► Take the battery out of the pen (1) and close the rear pen cap (2).

Inserting the pen battery

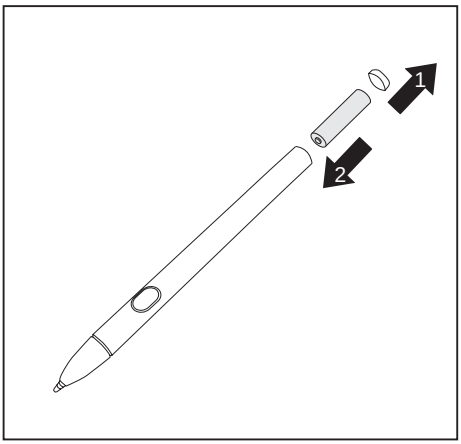

- ► Remove the rear pen cap (1) and insert the new battery into the pen (2).
- ► Close the rear pen cap.

Replacing the pen tip

With use, the pen tip may become worn or may pick up foreign particles that can scratch the screen. A damaged or worn tip may not move freely, causing unpredictable results when using the pen.

If problems like these occur with your pen, you should replace the pen tip.

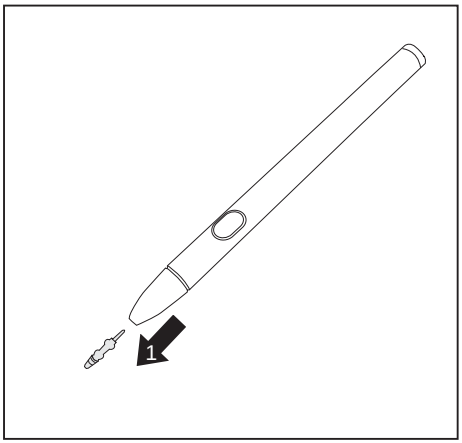

- ► Pull the tip from the barrel.
- ► Use one of the new tips that were supplied with your pen to replace the tip. Insert the pointed end of the tip into the barrel and push it in firmly until it is in place.

Do not continue to use a tip which is worn or damaged.

Installing a pen cord

You should attach the pen with a pen cord to prevent accidentally dropping or losing it.

- ► Attach one end of the pen cord to your pen and the other end of the pen cord to your notebook.

Using the device as a notebook

Touchpad and touchpad buttons

Keep the touchpad clean. Protect it from dirt, liquids and grease.

Do not use the touchpad if your fingers are dirty.

Do not rest heavy objects (e.g. books) on the touchpad or the touchpad buttons.

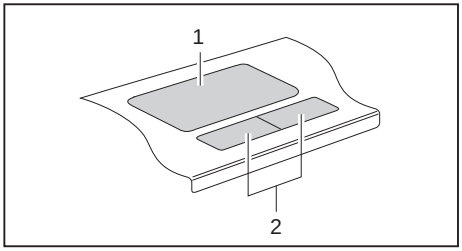

1 = Touchpad

2 = Touchpad buttons

The touchpad enables you to move the mouse pointer on the screen.

The touchpad buttons allow you to select and execute commands. They correspond to the buttons on a conventional mouse.

You can use a key combination to disable the touchpad, to avoid accidentally moving the pointer on the screen (see also "Key combinations", Page 50).

Moving the pointer

► Move your finger on the touchpad.

↳ The pointer will move.

Selecting an item

► Move the pointer to the item you wish to select.

► Tap the touchpad once or press the left button once.

↳ The item is selected.

Executing commands

► Move the pointer to the field you wish to select.

► Tap the touchpad twice or press the left button twice.

↳ The command is executed.

Dragging items

- ► Select the desired item.
- ► Press and hold the left button and drag the item to the desired position with the finger on the touchpad.

↳ The item will be moved.

Switching the Touchpad on and off

You can switch the Touchpad on and off using a key combination, see "Key combinations", Page 50.

Keyboard

The keyboard of your notebook is subject to continuous wear through normal use. The key markings are especially prone to wear. The key markings are liable to wear away over the life of the notebook.

The keyboard has been designed to provide all the functions of an enhanced keyboard. Some enhanced keyboard functions are mapped with key combinations.

The following description of keys refers to Windows. Additional functions supported by the keys are described in the relevant manuals supplied with your application programs.

The figure below shows how to access the different characters on keys with overlaid functions. The example applies when the Caps Lock key has not been activated.

The illustrations shown below may differ from your actual device.

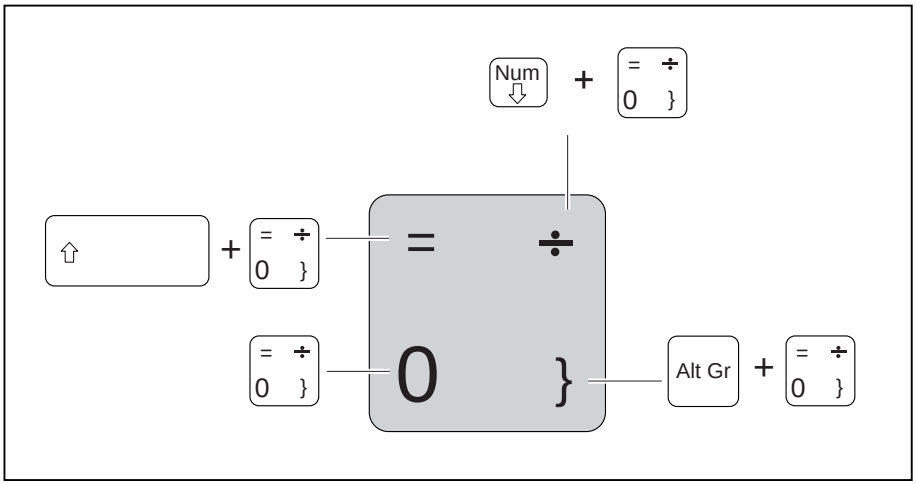

Key	Description
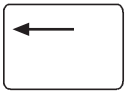	**Backspace key** The Backspace key deletes the character to the left of the cursor.
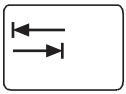	**Tab key** The Tab key moves the cursor to the next tab stop.
	Enter key (return) The Enter key terminates a command line. The command you have entered is executed when you press this key.
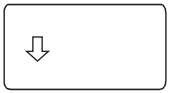	**Caps Lock key** The Caps Lock key activates the Caps Lock mode, and the corresponding icon is displayed in the Windows information area. In Caps Lock mode, all of the characters you type appear in upper case. In the case of overlay keys, the character printed on the upper left of the key will appear when that key is pressed. To cancel the Caps Lock function, simply press the Caps Lock key again.
	Shift key The Shift key causes uppercase characters to appear. In the case of overlay keys, the character printed on the upper left of the key appears when that key is pressed.
	Fn button The Fn key enables the special functions indicated on overlay keys (see "Key combinations", Page 50).
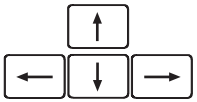	**Cursor keys** The cursor keys move the cursor in the direction of the arrow, i.e. up, down, left, or right.
	Start key The Start key opens the Windows Start menu.
	Menu key The Menu key invokes the menu for the marked item.

Virtual numeric keypad

To provide the convenience of a numeric keypad, your keyboard is equipped with a virtual numeric keypad. The special keys of the virtual numeric keypad are recognisable by the numbers and symbols printed in the upper right corner of each key. If you have switched on the virtual numeric keypad, you can output the characters shown on the upper right of the keys.

The keyboard layout shown below may differ from your actual device.

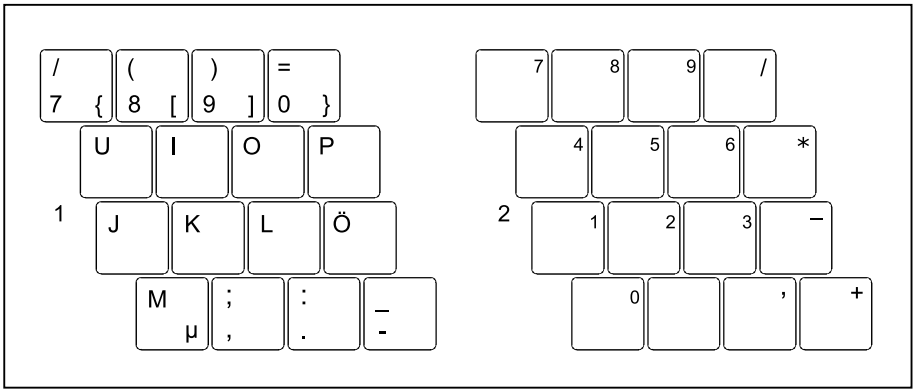

1 = Valid characters when the Num key is not activated

2 = Valid characters when the Num is activated

Further information about the status indicators can be found in chapter "Status indicators", Page 19.

Country and keyboard settings

If you want to change the country and keyboard settings, proceed as follows:

► Enter the settings by clicking *Start – (Settings) – Control Panel – Time, Regional and Language Options*.

Key combinations

The key combinations described below apply when using Microsoft Windows operating systems. Some of the following key combinations may not function in other operating systems or with certain device drivers.

Key combinations are entered as follows:

- ► Press the first key in the combination and keep it pressed.
- ► While holding the first key down, press the other key or keys in the combination.

Combination	Description
Fn + F3	**Switching the loudspeakers on/off** This key combination switches the integrated loudspeakers on and off.
Fn + F4	**Enable/disable touchpad** This key combination enables and disables the touchpad.
Fn + F6	**Decrease screen brightness** This key combination decreases the brightness of the screen.
Fn + F7	**Increase screen brightness** This key combination increases the brightness of the screen.
Fn + F8	**Decrease volume** This key combination reduces the volume of the internal loudspeakers.
Fn + F9	**Increase volume** This key combination increases the volume of the internal loudspeakers.

Combination	Description
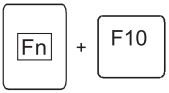	**Toggle output screen** Use this key combination to select which screen(s) is/are used for display if an external monitor is connected. Screen output is possible: • only on the notebook's LCD screen • only on the external monitor • on the notebook's LCD screen and the external monitor at the same time. Press the key combination several times to switch through all possible settings. If you have connected two external monitors to the port replicator, the following display outputs are possible: • only on the notebook's LCD screen • only on the external monitor (analogue) • at the same time on the LCD screen (digital) • at the same time on the notebook's LCD screen and on the external monitor (analogue) You cannot use the key combination to switch output at the same time to both external monitors on the Port Replicator.
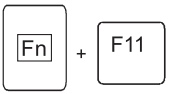	**Fujitsu Powersaving Utility** This key combination starts the "Fujitsu Powersaving Utility". With the "Fujitsu Powersaving Utility" you can adjust various power saving options.
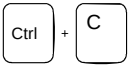	**Halt current operation** This key combination can be used to halt an operation instantly without clearing the keyboard buffer.
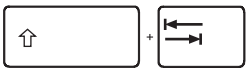	**Back tab** This key combination moves the cursor back to the previous tab stop.

Tablet buttons

Your notebook has three multifunctional tablet buttons. You can navigate on the screen with a simple press of a button, call preset applications or ones that you have set yourself.

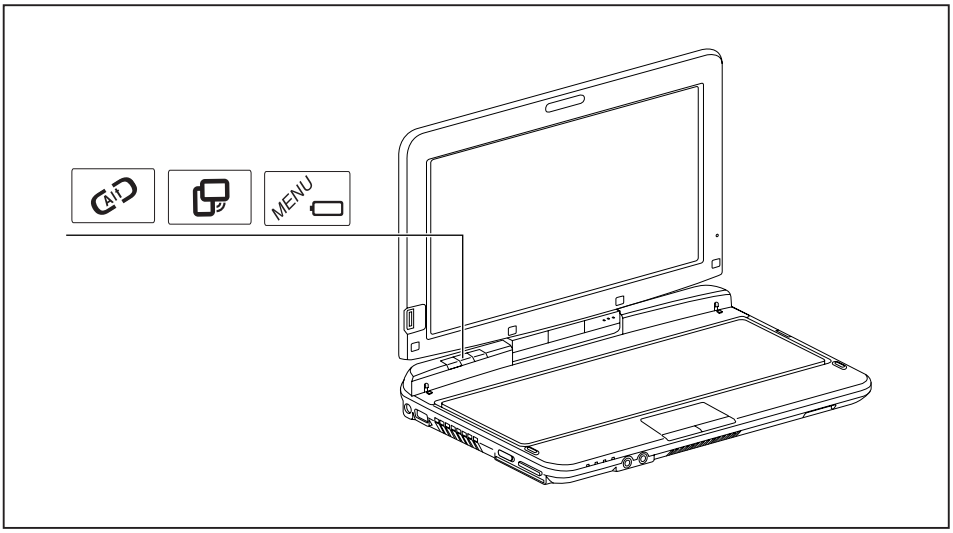

Basic functions when the device has booted

Button	Basic function
	Log on to the system or open the Windows Task Manager If you hold this tablet button down for two seconds, you can log back on to the system again: • after system startup • after a system lock • when returning from power management After log-on, pressing the tablet button for two seconds launches the Windows Task Manager or – in the network – opens the security window.
	Change screen orientation When you press the Orientation button, the orientation of the screen display changes from portrait (vertical) to landscape (horizontal) or vice versa. When you would like to use the Tablet PC as an eBook, for example, you would use the portrait orientation. When accessing spreadsheets, you would more typically use a landscape orientation.
	Open Fujitsu menu Pressing this tablet button will bring up the *TouchLauncher* on your screen. The *TouchLauncher* is used to start installed programs. Pressing and holding this tablet button will bring up the Fujitsu menu on your screen. The Fujitsu menu is used to change certain system settings. Pressing this tablet button in Sleep or Off mode will bring up the battery check. You can check the current battery status without the need to start the operating system. The battery LED indicates the battery status.

Webcam

Depending on the software used, you can use your Webcam to take pictures, record video clips or take part in web chats.

- The picture quality depends on the lighting conditions and the software being used.
- You can only operate the webcam with a particular application (e.g. an Internet telephony program or a video conferencing program which supports a webcam).
- When using the webcam the notebook support must not wobble.
- The webcam automatically adjusts itself to the current light level. For this reason the LCD screen may flicker while the light level is adjusted.

Further information on use of the webcam and additional settings can be found in the help function of the program which uses the webcam.

If you wish to carry out a function test with your webcam, you can use the corresponding test software available at "http://ts.fujitsu.com/support/".

Rechargeable battery

When not plugged into a mains socket, the notebook runs on its built-in battery. You can increase the life of the battery by caring for the battery properly. The average battery life is around 500 charge/discharge cycles.

You can extend the battery life by taking advantage of the available energy saving functions.

Charging, caring for and maintaining the battery

The notebook battery can only be charged, when the ambient temperature is between 5°C and max. 35°C.

You can charge the battery by connecting the notebook to the mains adapter (see "Mains adapter connecting", Page 16).

If the battery is running low you will hear a warning alarm. If you do not connect the mains adapter within five minutes of the warning alarm described above, your notebook will automatically switch off.

monitoring the battery charging level

Windows also has a "Battery status meter" in the taskbar for monitoring the battery capacity. When you place the mouse pointer on the battery symbol, the system displays the battery status.

The battery capacity can be monitored using an indicator which shows the current state of charge. Use the following menu to enable this feature:

Operating system	Menu
Windows XP	*Start – (Settings) – Control panel–Power options*
Windows 7	*Start – (Settings) – Control panel – Mobile PC – Power options*

The indicator is then displayed in the task bar as a battery symbol. When you place the mouse pointer on the battery symbol, the system displays the battery state of charge. Please refer to the Help facility of the operating system for more information.

Battery storage

Keep the battery pack between 0°C and +30°C. The lower the temperature at which the batteries are stored, the lower the rate of self-discharge.

If you will be storing batteries for a longer period (longer than two months), the battery charge level should be approx. 30 %. To prevent exhaustive discharge which would permanently damage the battery, check the level of charge of the battery at regular intervals.

To be able to make use of the optimal charging capacity of the batteries, the battery should be completely discharged and then fully recharged.

If you do not use the batteries for long periods, remove them from the notebook. Never store the batteries in the device.

Removing and installing the battery

Only use rechargeable batteries approved by Fujitsu Technology Solutions for your notebook.

Never use force when fitting or removing a battery.

Make sure that no foreign bodies get into the battery connections.

Never store a battery for longer periods in the discharged state. This can make it impossible to recharge.

Removing the battery

► Prepare for removal, see chapter "Preparing to remove components", Page 91.

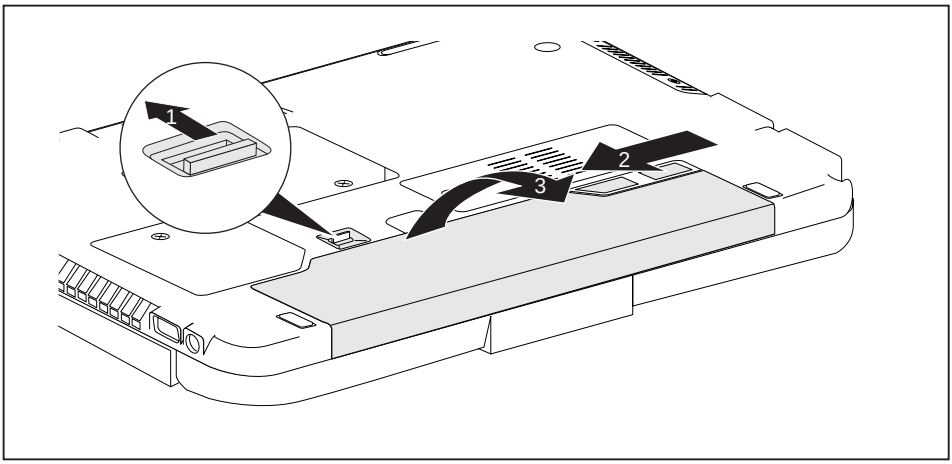

► Slide the release button in the direction of the arrow (1) and hold it in place.
► Slide the release mechanism in the direction of the arrow (2).
► Remove the battery from the battery compartment (3).

Installing the battery

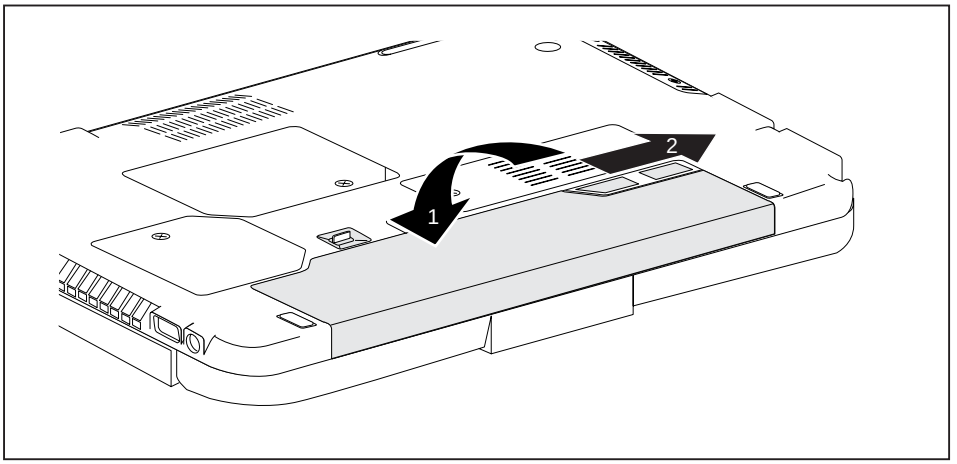

► Push the battery into the battery compartment until you feel it engage (1).
► Slide the release mechanism in the direction of the arrow (2).
► Complete the removal, see chapter "Finishing component removal", Page 95.

Using the power-management features

The notebook uses less power when the available power-management features are used. You will then be able to work longer when using the battery before having to recharge it.

Power efficiency is increased and environmental pollution reduced. By choosing the best power options, you can make significant savings and at the same time help protect the environment.

When you fold down and close the LCD screen, depending on the setting in Windows, the notebook automatically enters a power saving mode.

We recommend the following settings:

Function	On external power	On battery power
Turn off monitor	After 10 minutes	After 5 minutes
Turn off hard disk(s)	After 15 minutes	After 10 minutes
Energy saving (S3)	After 20 minutes	After 15 minutes
Hibernate mode (S4)	After 1 hour	After 30 minutes

- ► Select the power management functions in your Control Panel.
- ► Select the Screen Saver in your Control Panel.

or

- ► Right-click on the desktop. Switch on the screen saver by clicking *Personalization – Change screen saver*.

If you need further information about an option, you can get help with most settings by pressing F1 to open the Microsoft Help.

When the notebook is in power-saving mode, the following must be remembered:

During power saving mode, open files are held in the main memory or in a swap file on the hard disk.

Never turn off your notebook while it is in a power saving mode. If the built-in battery is nearly flat, close the open files and do not go into power saving mode.

If you do not intend to use your notebook for a long period of time:

- ► Exit power saving mode if necessary via the mouse or keyboard or by switching on the notebook.
- ► Close all opened programs and completely shut down the notebook.

Memory cards

Your notebook is equipped with an integrated memory card reader.

Observe the manufacturer's instructions when handling the memory cards.

Supported format

It supports the following format:

- Secure Digital (SD™ card)

Inserting the memory card

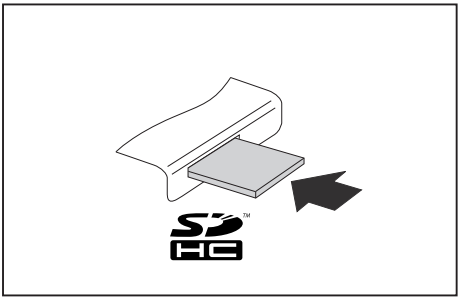

► Carefully slide the memory card into the slot. The label should be facing upward. Do not apply excessive force, as otherwise the delicate contact surfaces could be damaged.

↳ Depending on the particular type used, the memory card may protrude slightly from the slot.

Removing the memory card

In order to protect your data, always follow the correct procedure for removing the card outlined below.

You can stop the memory card via the corresponding icon in the task bar:

- ► Left-click on the icon.
- ► Select the card you want to stop and remove.
- ► Press the Enter key.

↳ Wait for the dialogue box which tells you that it is now safe to remove the memory card.

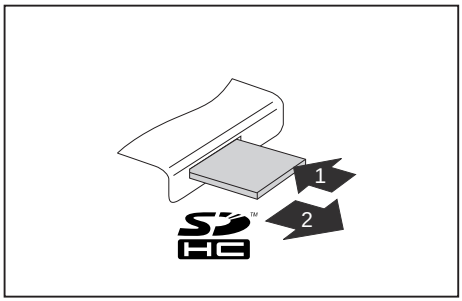

- ► On devices with card locking: Press on the storage card (1).

↳ The storage card is released and can now be removed.

- ► Pull the storage card out of the slot (2).

Loudspeaker and microphone

Information on the exact position of the speaker and microphone can be found in "Ports and controls", Page 9.

Please refer to chapter "Key combinations", Page 50 for information on setting the volume and also enabling/disabling the loudspeakers using key combinations.

If you attach an external microphone, the built-in microphone is disabled.

When you connect headphones or external speakers, the built-in speaker is disabled.

Information on connecting headphones and a microphone can be found in "Connecting external devices", Page 85.

SIM card

A SIM Card (Subscriber Identity Module) is a chip card which is inserted in a mobile telephone or notebook to enable access to a mobile radio network in conjunction with an installed UMTS module.

Follow the instructions supplied by the provider of the SIM card.

The SIM card slot is located in the battery compartment and can only be accessed when the battery is removed.

Inserting the SIM card

► Prepare for insertion of the SIM card, see chapter "Preparing to remove components", Page 91.

► If necessary, open the clip (a) of the SIM card.

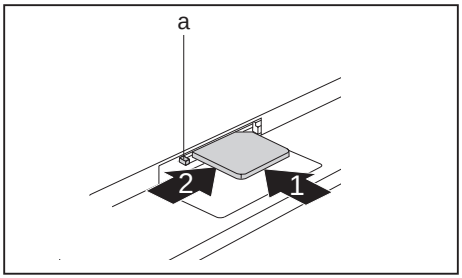

► Slide the SIM card into the slot (1) until it engages, as shown in the battery compartment.

► Slide the SIM card lock (a) in the direction of the arrow (2).

The UMTS module will be activated only if the SIM card lock is closed.

► Complete the insertion, see chapter "Finishing component removal", Page 95.

Removing a SIM card

► Prepare for removal of the SIM card, see chapter "Preparing to remove components", Page 91.

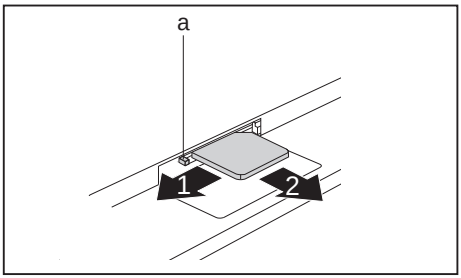

► Slide the SIM card lock (a) in the direction of the arrow (1).

► Press on the edge of the SIM card so that it jumps up slightly out of the slot.

► Pull the SIM card out of the slot in the direction of the arrow (2).

► Complete the removal, see chapter "Finishing component removal", Page 95.

Wireless LAN / Bluetooth / UMTS

The installation of radio components not approved by Fujitsu Technology Solutions will invalidate the certifications issued for this device.

Switching the wireless components on and off

Before switching on your device for the first time, the on/off switch for radio components must be in the "ON" position.

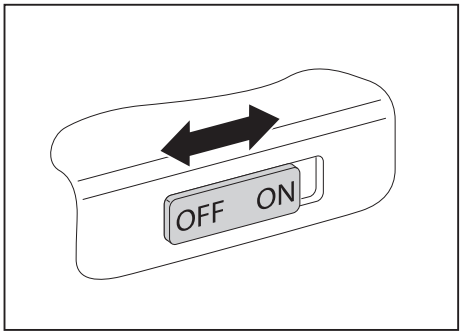

► Slide the ON/OFF switch into the "ON" position to activate the radio components.

or

► Slide the ON/OFF switch to the "OFF" position to deactivate the radio components.

If you switch off the radio components, the wireless LAN transmission unit (antenna) and, if present, the Bluetooth and UMTS module will also be switched off.

You can configure your wireless devices with the *PlugFree Network application*.

The *PlugFree Network application* is pre-installed on your system.

You can also deactivate the wireless components individually in the *BIOS Setup*. For this to occur, you must either not have assigned a supervisor password or if a supervisor password has been assigned, you must know this password.

Pay attention to the additional safety notes for devices with wireless components provided in the "Safety" manual.

Details on using Wireless LAN can be found in the online help system included in the Wireless LAN software.

You can find more information on how to use Bluetooth on the CD you received with your Bluetooth software.

You can obtain more information on UMTS from your service provider.

Setting up WLAN access

- Requirement: A WLAN must be available and you must have the corresponding access information.

Information on configuring the WLAN access can be found in the documentation for your operating system.

Access via UMTS

If you ordered an integrated UMTS module with your system, you can enjoy optimum reception and maximum energy efficiency without awkward cables or antennas. The optional UMTS module is ready for use straight away.

If you did not order a UMTS module, you can purchase the accessories for UMTS reception from your retailer or your Fujitsu Technology Solutions dealer.

You will find information on establishing the connection with the UMTS network in the documentation for the hardware used.

You can connect your device with the Internet via UMTS. To do this, use one of the following types of connection:

- a USB dongle (a USB stick with your mobile phone provider's SIM card)
- mobile end-device (e.g. mobile phone with Bluetooth or cable connection)

UMTS antenna

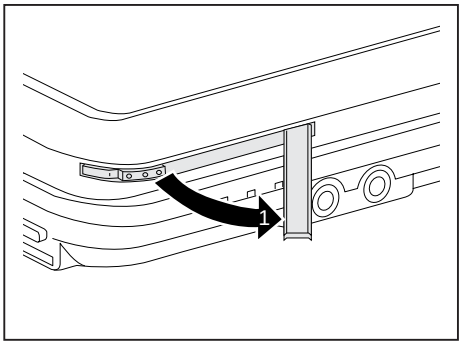

► To use the optimum reception, swing out the UMTS antenna.

Ethernet and LAN

The internal network module of your notebook supports Ethernet LAN. You can use it to establish a connection to a local network (LAN = Local Area Network).

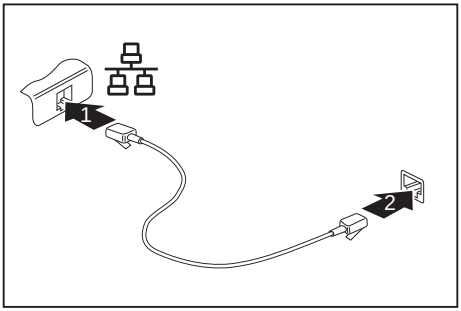

- ► Connect the network cable to the LAN port of the notebook (1).
- ► Connect the network cable to your network connection (2).

Your network administrator can help you to configure and use the LAN connections.

The network cable is not included in the delivery scope. This type of cable can be obtained from a specialist dealer.

Security functions

Your notebook has several security features that you can use to secure your system from unauthorised access.

This chapter explains how to use each function, and what the benefits are.

Please remember that in some cases, for example, forgetting your password, you may be locked out and unable to access your data. Therefore, please note the following information:

- Make regular backups to external storage devices such as external hard drives, CD or DVD disks.
- Some security functions need you to choose passwords. Make a note of the passwords and keep them in a safe place.

If you forget your passwords you will need to contact the our Service Desk. Deletion or resetting of passwords is not covered by your warranty and a charge will be made for assistance.

Brief overview of security functions

Detailed information about the security equipment of your device can be found in the "Professional Notebook" manual, on the "Drivers & Utilities" CD/DVD or on our website at "http://ts.fujitsu.com/support/".

Security functions	Type of protection	Preparation
Kensington Lock	Mechanical	Fit and lock Kensington MicroSaver (accessory).
Fingerprint sensor	Biometric	Install the supplied fingerprint software.
BIOS password protection	Password protection for *BIOS Setup*, operating system and hard disk with supervisor and user password. The passwords consist of a maximum of eight alphanumeric characters.	Specify at least one supervisor password in the *BIOS Setup* and activate the password protection for the operating system and hard disk as desired.
Boot from removable media	Prevents unauthorised booting of an operating system from external media (e.g. USB stick, USB CD-ROM drive etc.).	In the BIOS Setup, go to the *Security* menu and edit the option *Boot from Removable Media*.
Owner Information	Overlay service desk or owner information during the boot process.	In the BIOS Setup, go to the *Security* menu and edit the option *Owner Information*.
SmartCard reader	PIN and SmartCard protection for operating system	Install software e.g. *SmartCase Logon*+ (accessories). Specify a password when using the *SmartCase Logon*+ software.
Trusted Platform Module (optional)	Identification and authentication of the notebook	Define a supervisor password in the *BIOS Setup* and enable the TPM (*Security Chip*).

Configuring the fingerprint sensor

The fingerprint sensor can record an image of a fingerprint. With additional fingerprint software, this image can be processed and used instead of a password.

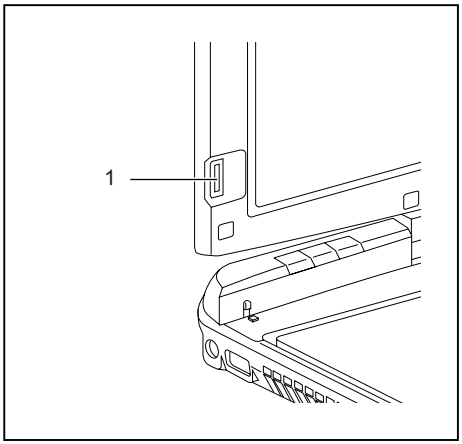

► You must install the fingerprint software in order to be able to use the fingerprint sensor (1).

Use Kensington Lock

Your device comes with a Kensington Lock device for the Kensington MicroSaver. With the Kensington MicroSaver, a sturdy steel cable, you can help protect your notebook from theft. The Kensington MicroSaver is available as an accessory.

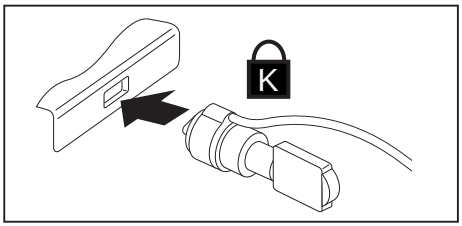

► Fit the Kensington MicroSaver on the device on your notebook.

Configuring password protection in BIOS Setup Utility

Before using the various options for password protection in the *BIOS Setup utility* to increase data security, please observe the following:

Make a note of the passwords and keep them in a safe place. If you forget your supervisor password you will not be able to access your notebook. Passwords are not covered by your warranty and a charge will be made for assistance.

Your password can be up to eight characters long and contain letters and numbers. No distinction is made between uppercase and lowercase.

Protecting BIOS Setup Utility (supervisor and user password)

If you have opened these operating instructions on the screen, we recommend that you print out the following instructions. Because you cannot call the instructions onto the screen while you are setting up the password.

You prevent unauthorised use of the *BIOS Setup Utility* with both the supervisor and the user password. The supervisor password gives you access to all functions of the *BIOS Setup Utility*, while the user password only provides some of the functions. You can only set a user password if a supervisor password has already been assigned.

Please refer to the "Settings in BIOS Setup Utility", Page 96 section for a description of how to call up and operate the *BIOS Setup Utility*.

Setting supervisor and user password

- ► Start the *BIOS Setup Utility* and go to the *Security* menu.
- ► Select the *Set Supervisor Password* field and press the Enter key.
- ↳ With *Enter new Password*: you are asked to enter a password.
- ► Enter the password and press the Enter key.
- ↳ *Confirm new Password* requires you to confirm the password.
- ► Enter the password again and press the Enter key.
- ↳ *Changes have been saved* is a confirmation that the new password has been saved.
- ► To set the user password, select *Set User Password* and proceed exactly as when configuring the supervisor password.
- ↳ If you do not want to change any other settings, you can exit *BIOS Setup Utility*.
- ► In the *Exit* menu, select the option *Save Changes & Exit*.
- ► Select *Yes* and press the Enter key.
- ↳ The notebook will be rebooted and the new password will come into effect. It will now be necessary to first enter your supervisor or user password in order to open the *BIOS Setup Utility*. Please note that the user password only provides access to a few of the BIOS settings.

Changing the supervisor or user password

You can only change the supervisor password when you have logged into the *BIOS Setup Utility* with the supervisor password.

- ► Call the *BIOS Setup Utility* and go to the *Security* menu.
- ► When changing the password, proceed exactly as for password assignment.

Removing passwords

To remove a password (without setting a new password) perform the following steps:

- ► Start the *BIOS Setup Utility* and go to the *Security* menu.
- ► Highlight the *Set Supervisor Password* or *Set User Password* field and press the Enter key.
- ↳ You will be requested to enter the current password by the *Enter Current Password* prompt.
  You will be requested to enter a new password by the *Enter New Password* prompt.
- ► Press the Enter key twice.
- ► In the *Exit* menu, select the option *Save Changes & Exit*.
- ► Select *Yes* and press the Enter key.
- ↳ The notebook will now reboot with the password removed.
  Removing the supervisor password simultaneously deactivates the user password.

Password protection for booting of the operating system

With the supervisor password you have set in the *BIOS Setup Utility* (see section "Setting supervisor and user password", Page 68), you can also prevent booting of the operating system.

Activating system protection

- ► Start the *BIOS Setup Utility* and go to the *Security* menu.
- ► Select the *Password on Boot* option and press the Enter key.
- ► Select the desired option (*Disabled*, *First Boot* or *Every Boot*) and press the Enter key
- ► Select the *Save Changes & Exit* option under *Exit*.
- ↳ The notebook will reboot. You will be prompted to enter your password (the supervisor password).

Deactivating system protection

- ► Start the *BIOS Setup Utility* and go to the *Security* menu.
- ► Select the *Password on Boot* option and press the Enter key.
- ► Select the *Disabled* option and press the Enter key.
- ↳ If you do not want to change any other settings, you can exit *BIOS Setup Utility*.
- ► Select the *Save Changes & Exit* option under *Exit*.
- ↳ The notebook will reboot. The system is no longer password-protected.

SmartCard reader

SmartCards are not supplied as standard equipment. You can use all SmartCards that comply with the ISO standard 7816-1, -2 or -3. These SmartCards are available from various manufacturers.

With the appropriate software you can use your SmartCard as an alternative to password protection, but also as a digital signature, for encrypting your e-mails or for home banking.

We recommend that you always use two SmartCards. Always keep one of the SmartCards in a safe place if you are carrying the other SmartCard with you.

In order to be able to take advantage of all the security features of your notebook, you will need a CardOS SmartCard from Fujitsu Technology Solutions.

The SmartCard can only be used with a PIN, offering maximum protection even if you lose the SmartCard. In order to maximise your security, the CardOS SmartCard is disabled if three incorrect attempts are made to enter the PIN.

When you use the CardOS SmartCard for the first time, you will either need to enter the preset PIN "12345678" or the PIN given to you by your systems administrator.

Inserting the SmartCard

Do not use force when inserting and removing the SmartCard.

Make sure that foreign objects do not fall into the SmartCard reader.

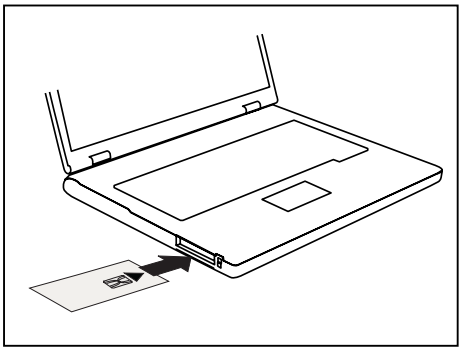

► Slide the SmartCard into the SmartCard reader with the chip facing upwards (on some variants it faces down) and to the front.

SmartCard SystemLock (optional)

With *SystemLock* enabled, the device can only be started using an initialised SmartCard (SICRYPT, CardOS or Fujitsu) and a personal identification number (PIN). The SmartCard and PIN are checked during system booting in the BIOS, i.e. before the operating system is started.

SmartCard SystemLock		
SmartCard SystemLock Install Single PC: Install Group PC:	Not Installed [Enter] [Enter]	Item Specific Help Installs the security for this PC, and creates a new SystemLock Admin SmartCard dedicated to this PC. SmartCard data will be overwritten. A correct SmartCard is required for a permanent installation

All new SmartCards have a preset PIN (Personal Identification Number) and PUK (Personal Unblocking Key).

On SICRYPT and CardOS SmartCards, the value *12345678* is preset for the PIN and the PUK.

On Fujitsu cards, the value *0000* is preset for the PIN and the value *administrator* is preset for the PUK. For security reasons, we recommend that you change both PIN and PUK without fail.

Additional software (e.g. Smarty) is required so that the system can also check that the correct SmartCard is inserted while the system is running.

You will find information on how to uninstall *SystemLock* under "Uninstalling SystemLock". A system which was protected using *SystemLock* can no longer be released.

Always create a backup copy of the SmartCard which was used.

Access rights of SmartCards

A new SmartCard initially only has a preset PIN and PUK. Access rights and the customised PIN and PUK are not assigned until the SmartCard is initialised. The SmartCard type depends on the access rights assigned to the card, as described below:

- User SmartCard: starting the system, changing the PIN
- SuperUser SmartCard: starting the system, changes in *BIOS Setup*, changing the PIN
- Service SmartCard: changes in *BIOS-Setup*,, cannot start the operating system
- Admin SmartCard: starting the system, changes in *BIOS Setup*, changing the PIN, uninstalling *SystemLock*, initialising SmartCards, blocking SmartCards

The following table shows an overview of the rights granted with each type of SmartCard when a PIN or PUK is entered:

	User SmartCard		**SuperUser SmartCard**		**Service SmartCard**		**Admin SmartCard**	
	PIN	PUK	PIN	PUK	PIN	PUK	PIN	PUK
Start-up system	x		x				x	
Run BIOS Setup			x		x		x	
Change own PIN	x		x		x		x	x
Unblocking own blocked SmartCard		x*		x*		x*		x
Unblock all blocked SmartCards								x
Generating user cards								x
Uninstall SystemLock								x

* *BIOS Setup* setting (*Unblock own SmartCard*)

Usually there is always one Admin SmartCard and at least one User or SuperUser SmartCard that will allow a system to be operated.

SmartCard user groups

User groups can be set up using *SystemLock*. This enables several systems to be started with one SmartCard. A user group consists of at least two systems. Each user that is allowed to start the systems is provided with one SmartCard. The user can start any of the systems using this SmartCard.

Basic information on setting up user groups

When installing *SystemLock*, the first PC in the user group is set up as a "Single PC". The Admin SmartCard generated during this process is used to set up the user group. *SystemLock* sets up each additional device as a "Group PC" during installation. The existing Admin SmartCard is inserted, information is read in and the device is added to the user group. The Admin SmartCard determines which user group the device belongs to.

If you use FSC-CardOS SmartCards, *SystemLock* can be administered via the Windows program "SystemLock Admin". "SystemLock Admin" allows you to conveniently manage *SystemLock* at the operating system level, create SystemLock Organisation Units and Groups, generate SmartCards for these Organisation Units or Groups, assign access rights for user cards at various levels and restore access rights using remote access. You can also change the SmartCard's PIN or PUK for yourself and other users and reactivate blocked cards. For a detailed description, see the "SystemLock Admin" Help manual.

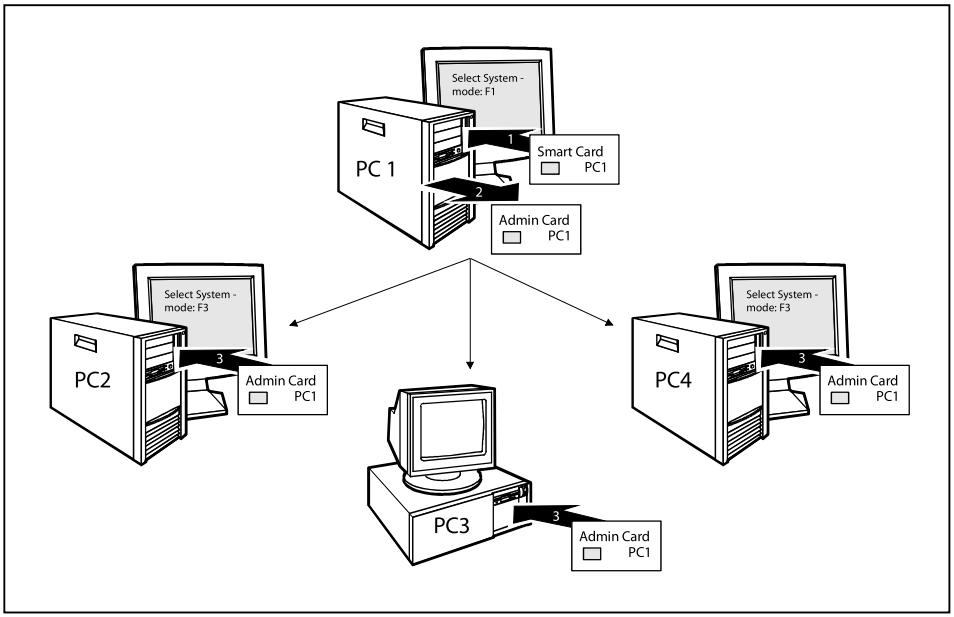

User SmartCards or SuperUser SmartCards must still be generated using *SystemLock* so that users can access the systems within the user group. Using a User SmartCard or SuperUser SmartCard a user can log on to each system within the user group.

Installing SystemLock

During initial installation, the first SmartCard becomes the Admin SmartCard. Together with the PUK, it has all access rights, and should therefore be kept in a safe place. It must only be used by an authorised user (Administrator), for instance to initialise user cards.

You need an Admin SmartCard if you want to set up a user group. You use this Admin SmartCard to add further systems to the user group.

Setting up the first system in a user group or a stand-alone system for use with SystemLock

► Start the device and call up BIOS Setup.

► From the *Security* menu, choose the option *SmartCard SystemLock*.

↳ The following SmartCard SystemLock menu will be displayed:

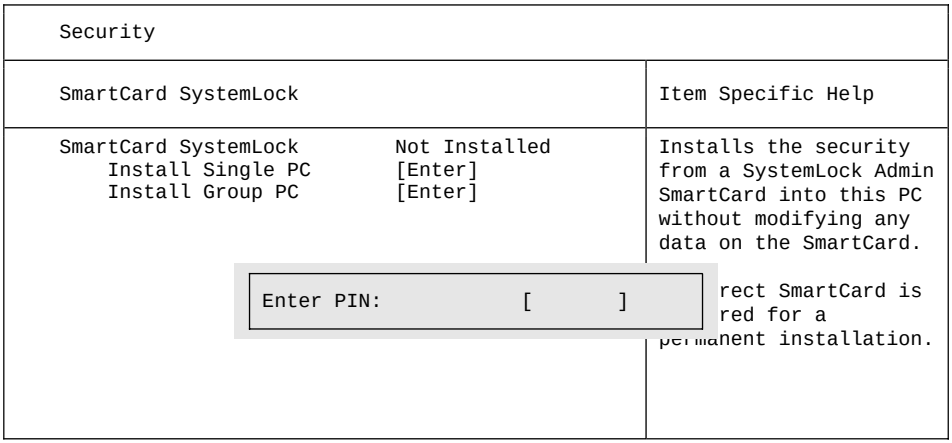

► Insert a new SmartCard in the reader and press Enter.

New SmartCards have a preset PUK (see above).

if you want to re-initialise a previously initialised SmartCard, you will need to know the PUK which was assigned to it.

► Enter the PUK.

↳ When the following appears:

- *ACCESS DENIED* = You have entered an invalid PUK. After six failed attempts, the SmartCard will be blocked and can no longer be used.

► Enter a new PIN at the following prompt:

↳ *Enter new PIN:*

Confirm new PIN:

A number with 4 to 8 digits is acceptable for the new PUK. For security reasons, we recommend that you change the PUK for every SmartCard, and use an 8-digit number each time.

► Re-enter the new PIN to confirm.

↳ When the following appears:

- *PIN/PUK do not match* = You have confirmed the PIN incorrectly. You will be requested to re-enter the new PIN and reconfirm.

Please wait a few seconds after confirming the new PIN: *SystemLock* is being installed.

The following message will be displayed if installation is successful:

```
Setup Notice
Changes have been saved
[Continue]
```

► Now press the Enter key. The SystemLock administration menu will be displayed:

Security		
SmartCard SystemLock		Item Specific Help
SmartCard SystemLock Uninstall: BIOS Recovery: SmartCard and Pin SmartCard Initialization Admin SmartCard SuperUser SmartCard: User SmartCard: Service SmartCard: SmartCard Configuration Change PIN: Change PUK: Unblock SmartCard:	Installed [Enter] [Allowed] [Always required] [Enter] [Enter] [Enter] [Enter] [Enter] [Enter] [Enter]	Allows to deactivate The smartcard security. ATTENTION: Always check the BIOS password settings after uninstalling SystemLock. NOTICE: Reinstalling a SinglePC implies re-initializing all of your smartcards

► For security reasons, the preset PUK should always be changed before removing the new SmartCard. To do this, under *SmartCard Configuration*, select the option *Change PUK*, press the Enter key and input the new PUK.

► First enter the preset PUK.

↳ *Enter the PUK:*

New SmartCards have a preset PUK (see above).

You will need to know the PUK assigned to the SmartCard if you want to re-initialise a previously initialised SmartCard.

► Enter the PUK.

↳ When the following appears:

- *ACCESS DENIED* = You have entered an invalid PUK. After six failed attempts, the SmartCard will be blocked and can no longer be used.

► Enter the new PUK as follows.

↳ *Enter new PUK:*

Confirm new PUK:

A number with 4 to 8 digits is acceptable for the new PUK. For security reasons, we recommend that you change the PUK for every SmartCard, and use an 8-digit number each time.

► Re-enter the new PUK to confirm.

↳ When the following appears:

- *PIN/PUK do not match* = You have confirmed the PUK incorrectly. You will then be requested to re-enter and reconfirm the new PUK.

Instructions on how to initialise an additional SmartCard can be found in Section "".

► If you do not want to initialise any further SmartCards, press Esc and remove the Admin SmartCard. NEVER write the PIN or PUK on the SmartCard under any circumstances!

i

Keep the SmartCard and PIN/PUK in a safe place and protect them from unauthorised access.

Adding a system to a user group

► Start the device.

► Call up *BIOS Setup* and select the *SmartCard SystemLock* page from the *Security* menu.

↳ The following SmartCard SystemLock menu will be displayed:

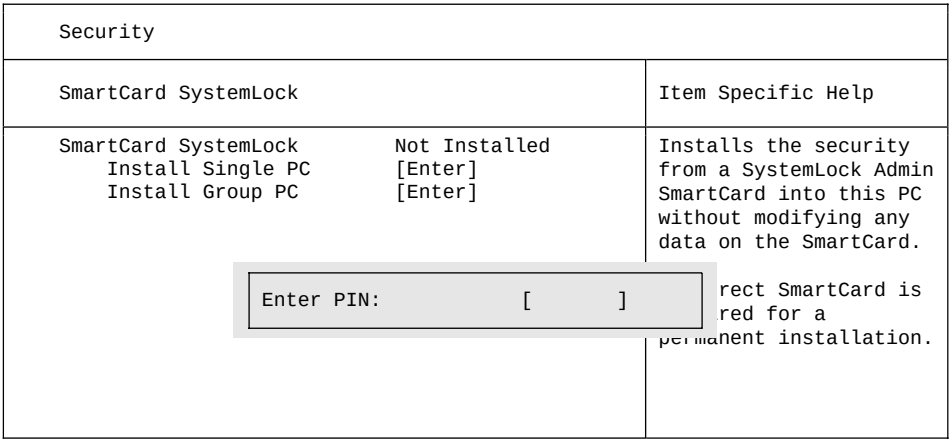

► Insert the Admin SmartCard for the user group.

↳ *Enter PIN:*

► Enter the PIN.

↳ When the following appears:

- *ACCESS DENIED* = You have confirmed the PIN incorrectly. You are then requested to enter and confirm the new PIN again. After three failed attempts, the SmartCard will be blocked and can then only be activated again by entering the PUK.

Enter the PUK:

► Enter the PUK.

↳ When the following appears:

- *ACCESS DENIED* = You have entered an invalid PUK. After six failed attempts, the SmartCard will be blocked and can no longer be used.

Please wait a few seconds after entering the PIN and PUK: *SystemLock* is being installed.

The following message will be displayed if installation is successful:

Setup Notice
Changes have been saved [Continue]

Now press the Enter key. The SystemLock administration menu will be displayed:

Security		
SmartCard SystemLock		Item Specific Help
SmartCard SystemLock	Installed	Allows to deactivate The smartcard security. ATTENTION: Always check the BIOS password settings after uninstalling SystemLock. NOTICE: Reinstalling a SinglePC implies re-initializing all of your smartcards
Uninstall:	[Enter]	
BIOS Recovery:	[Allowed]	
SmartCard and Pin	[Always required]	
SmartCard Initialization		
Admin SmartCard	[Enter]	
SuperUser SmartCard:	[Enter]	
User SmartCard:	[Enter]	
Service SmartCard:	[Enter]	
SmartCard Configuration		
Change PIN:	[Enter]	
Change PUK:	[Enter]	
Unblock SmartCard:	[Enter]	

Generate a user card for the device as described in Section "Carrying out administrator functions", Page 79.

► If you do not want to initialise any further SmartCards, press Esc and remove the Admin SmartCard.

Carrying out administrator functions

If you have an internal SmartCard reader, you can switch on the device by inserting the SmartCard. If you switch on the device with the On/Off switch then the following message appears:

SystemLock

Insert a SmartCard.

► Insert the Admin SmartCard. The following message will be displayed:

↳ *Enter your PIN:*

You can now select:

F2=Setup, F3=Change PIN, F4=Administration

► Press the F4 function key. The following message will be displayed:

↳ *Enter the PUK:*

► If you have entered the PUK correctly, you receive the following message:

↳ *PUK OK.*

Initialize another SmartCard or press ESC to abort?

F5=User, F6=SuperUser, F7=Admin, F8=Service, F9=Unblock SmartCard, F10=Uninstall

F5: Normal User SmartCard ("System" access rights):

Only allows system start-up, does not allow changes in BIOS Setup.

F6: Extended User SmartCard ("System and Setup" access rights):

Allows system start-up and changes in BIOS Setup.

F7: Admin SmartCard ("Admin" access rights):

Allows generation of further Admin SmartCards.

F8: Service SmartCard ("Service" access rights):

Only allows changes in BIOS Setup.

F9: Re-activate a blocked User SmartCard.

Enables a new user PIN entry.

F10: Uninstalls SystemLock.

Additional SmartCards should be produced either as Normal User SmartCards ("System") or as Extended User SmartCards ("System and Setup"). These then have restricted access to the device.

► Press the desired function key. The following message will be displayed:

↳ *Remove the SmartCard.*

► Remove the Admin SmartCard.

↳ *Insert a SmartCard.*

Keep the Admin SmartCard in a safe place and protect it from unauthorised access.

► Insert the next SmartCard. It will be initialised as required.

↳ The following message will be displayed:
Remove the SmartCard.

Always change the PIN and PUK for all further SmartCards. The PUK is used to re-activate a blocked SmartCard.

► Remove the User SmartCard and label it, e.g. with the name of the user. But NEVER write the PIN on the SmartCard under any circumstances!

Remote Access Enabling – F4

Requirement:

The device is centrally administered as part of an Organisation Unit and is registered in a SystemLock Admin database. The SmartCard used for the group installation must have been initialised beforehand using the *SystemLock Admin.EXE* Windows program (see "SmartCard user groups", Page 73).

In order to enable remote access to a device for a user, or to grant one-time remote access to the device for a guest or service technician, proceed as follows:

► Start the device.

↳ The prompt to insert a SmartCard will appear.

► Press the F4 key.

The following dialogue box will appear:

```
SmartCard SystemLock

Org Unit:       Company Department 1
PC Group:       Group 1
I-CODE 1:       0123456789ABCDEF
I-CODE 2:       0123456789ABCDEF
```

↳ The user must then contact the administrator or the administration hotline and inform them of the data and codes displayed .

The administrator then specifies the type of the once-only access rights:

User access	The user can boot the system once.
Service access	The user has one-time access to the BIOS for service purposes, without access to the SystemLock functions.
Admin access	The user has access to the BIOS and the SystemLock functions, e.g. for activating the device when the associated SmartCard has been lost.

An activation code will be generated that depends on the access rights granted; this will be given to the user by the Hotline.

The user must now press the Enter key on the PC to be activated, enter the first half (code 1) of the activation code and confirm the entry by pressing Enter. The dialogue box for entering the second half (code 2) of the activation code will appear. There is no limit to the number of incorrect entries that can be made.

When all 32 characters of the activation code have been correctly entered, the device will boot with the rights assigned by the administrator, in the same way as if a corresponding SmartCard were inserted.

The activation code can only be used once to start the device; it immediately becomes invalid when the device boots. If you wish to switch off the device and start it again without your SmartCard, the procedure described above must be repeated each time.

Switch on the device using SystemLock

If you have an internal SmartCard reader, you can switch on the device by inserting the SmartCard. If you switch on the device with the On/Off switch then the following message appears:

Insert a SmartCard.

► Insert your SmartCard.

↳ *Enter PIN:*

► Enter your PIN.

↳ When the following appears:

ACCESS DENIED = You have entered an incorrect PIN. After three failed attempts, the SmartCard will be blocked and can only be enabled again by entering the PUK.

↳ Depending on the rights assigned to your SmartCard, you can select the following functions when this message is displayed on the screen:

F2=Setup, F3=Change PIN

If your SmartCard has the appropriate rights, you can:

F2: start BIOS Setup.

F3: change PIN.

If you do not select a function, the system will boot up.

Start BIOS Setup F2

A SmartCard with the appropriate rights must be inserted (SuperUser, Service or Admin).

Changing PIN

It is possible to change the PIN for any initialised SmartCard.

► Press the function key F3.

► Enter the old PIN.

► Enter the new PIN.

A number with 4 to 8-digits is acceptable for the new PIN. For security reasons, we recommend that you change the PIN for every SmartCard, and use an 8-digit number each time.

► Confirm the new PIN.

Uninstall SystemLock

► Start the device.

► Follow the instructions given in section "Carrying out administrator functions", Page 79. Select "Uninstall" to uninstall *SystemLock*. You can now use the device again without the need for a SmartCard.

Error messages

In this chapter you will find the error messages which are generated by the mainboard and the SmartCard reader.

Error	Cause
Boot access denied	The SmartCard has no access rights to the system.
Check your SmartCard	The SmartCard is either inserted incorrectly or it is not a suitable SystemLock SmartCard.
SmartCard reader FAILURE	An error has occurred on the serial port to the SmartCard reader. If this error occurs frequently, the connection between the SmartCard reader and the mainboard must be checked, or the SmartCard reader must be replaced. While the error is present, access to the system is blocked.
Non-authorised SmartCard	The SmartCard cannot be used on this device. The SmartCard has been configured for a different device.
SystemLock installation FAILED:	An error occurred while installing *SystemLock*. Do not switch off the device, insert the "BIOS Flash diskette" instead. Perform a BIOS update and try the installation process again.
The SmartCard is blocked. *Enter the PUK:*	You have exceeded the maximum allowed number of incorrect PIN entries. The SmartCard is blocked. Enter the administrator PUK to re-activate the SmartCard. You must then enter a new User PIN to restart the system.

Trusted Platform Module - TPM (optional)

To use the TPM, you **must** activate the TPM in the *BIOS Setup* before the software is installed. The condition for this is that you have assigned at least the supervisor password (see "Security functions", Page 65).

Options for using the TPM

You can use the TPM in different ways:

Microsoft® BitLocker	BitLocker Drive Encryption (BDE) is a feature of Microsoft® Windows 7 and Ultimate Editions for encryption of the hard disk drive. Here, BitLocker uses the TPM for the storage of the recovery data which are used for decryption of the partition. It is also possible to use BitLocker without TPM and only to use the USB dongle for storing the crypto key. This option is mainly of interest if Windows 7 is installed on a computer on which TPM is not installed or an older version (before Version 1.2) is installed. For BitLocker to work, you must have set up at least two partitions on your hard drive. The first partition contains the boot information. The second, larger partition is encrypted and contains the operating system as well as the user data. **Important:** The partitions must be set up before Windows 7 is installed.

Enabling TPM

- Requirement: You have assigned a supervisor password, see "Security functions", Page 65.

► Call up the BIOS Setup and select the *Security* menu.

► Mark the *TPM Security Chip Setting* field and press the Enter key.

► Select *Enabled* to activate the TPM.

↳ Once you have activated the TPM the *Clear Security Chip* option appears.

Select *Clear Security Chip* to delete the holder in the TPM. By clicking on *Enabled*, all secret keys (e.g. SRK - Storage Root Keys, AIK - Attestation Identity Keys etc.) generated by applications are deleted.

Please note that you will then no longer be able to access the data you have encrypted with the keys based on that holder.

► Select the *Exit Saving Changes* option in the Exit menu.

► Press the Enter key and select *Yes*.

↳ The notebook will restart, and TPM will be enabled after the reboot.

Disabling TPM

- Requirement: You have assigned a supervisor password, see "Security functions", Page 65.

► Call up the BIOS Setup and select the *Security* menu.

► Mark the *TPM Security Chip Setting* field and press the Enter key.

► Select *Disabled* to deactivate the TPM.

► From the *Exit* menu, choose the option *Exit Saving Changes*.

► Press the Enter key and select *Yes*.

↳ Your notebook will now restart and TPM will be disabled.

Connecting external devices

Always refer to the safety information provided in "Important notes", Page 12 before connecting or disconnecting any devices to or from your notebook.

Always read the documentation supplied with the device you wish to connect.

Never connect or disconnect cables during a thunderstorm.

Never pull at a cable when disconnecting it. Always grasp the plug.

Follow the steps below in order, when connecting or disconnecting devices to your notebook:

With some devices such as USB devices, it is not necessary to switch off the notebook and the device before connecting/disconnecting. For more information about whether or not devices need to be switched off, please refer to the documentation supplied with the external device.

Some of the external devices require special drivers (see the operating system and external device documentation).

Connecting devices to the notebook

1. Turn off your notebook and all external devices.
2. Unplug your notebook and all devices from the mains sockets.
3. Connect the cables for your external devices following the instructions.
4. Plug all power cables into the mains sockets.

Disconnecting devices from the notebook

1. Turn off your notebook and all external devices.
2. Unplug your notebook and all devices from the mains sockets.
3. Disconnect the cables for your external devices following the instructions.

Connecting an external monitor

You can connect an external monitor to the analogue VGA monitor connection of the notebook. Screen output is limited to a maximum of two screens at any one time (see "Key combinations", Page 50, section "Toggle output screen").

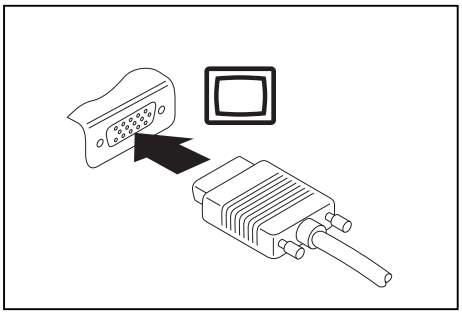

Analogue VGA monitor connection socket

- ► Switch off the notebook and the external monitor.
- ► Connect the data cable of the external monitor to the monitor port of the notebook.
- ► First switch on the external monitor and then the notebook.

You can also use a key combination to switch back and forth between the external monitor and the notebook's LCD screen, see chapter "Key combinations", Page 50.

You can display the same picture on the external monitor and the notebook LCD screen simultaneously.

HDMI port

The HDMI port of your notebook can be used to connect an external amplifier, LCD TV or a plasma TV with an HDMI connection.

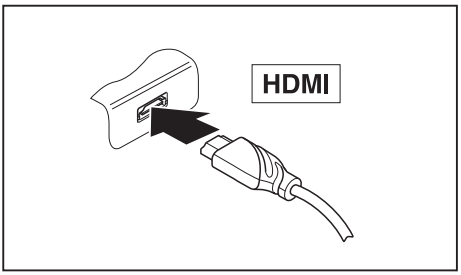

- ► Connect the data cable to the external device.
- ► Connect the data cable to the HDMI port of the notebook.

Under *Windows 7* the external device is connected automatically and the sound settings are adjusted.

Connecting USB devices

On the USB ports, you can connect external devices that also have a USB port (e.g. a DVD drive, a printer, a scanner or a modem).

USB devices are hot-pluggable. This means you can connect and disconnect devices while your operating system is running.

USB 1.x has a maximum data transfer rate of 12 Mbit/s.

USB 2.x has a data transfer rate of up to 480 Mbit/s.

Additional information can be found in the documentation for the USB devices.

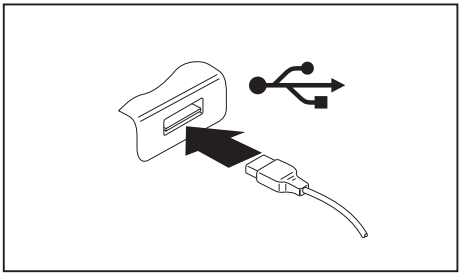

- ► Connect the data cable to the external device.
- ► Connect the data cable to a USB port of the notebook.

Device drivers

USB devices will be automatically recognised and installed by your operating system.

How to remove USB devices correctly

Always correctly remove the device according to the rules described below, to ensure that none of your data is lost.

- ► Left click on the icon to safely remove hardware, located in the taskbar.
- ► Select the device which you want to shut down and remove.
- ► Press the Enter key.

↳ Wait for the dialogue box which tells you that it is now safe to remove the device.

Connecting external audio devices

Microphone port / Line In

The microphone port/Line In allows you to connect an external microphone, a MiniDisc player, MP3 player, CD player or a tape deck to your notebook.

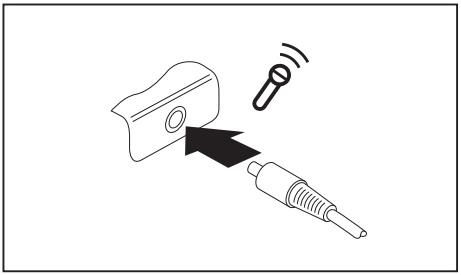

- ► Connect the audio cable to the external device.
- ► Connect the audio cable to the microphone port/Line In of the notebook.

Headphone port

You can connect headphones or external loudspeakers to your notebook via the headphone port.

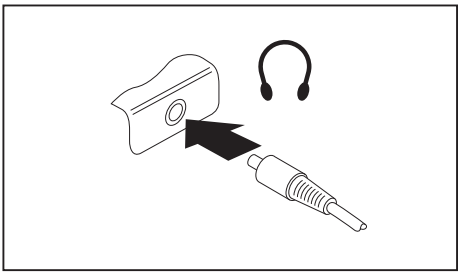

- ► Connect the audio cable to the external device.
- ► Connect the audio cable to the headphone port of the notebook.
- ↳ The internal loudspeakers are disabled.

i

If you purchase a cable from a retailer, please note the following information:

The headphone port on your notebook is a "3.5 mm jack socket".

If you want to connect headphones or a speaker you will need a "3.5 mm jack plug".

Removing and installing components during servicing

Only qualified technicians should repair your notebook. Unauthorised opening or incorrect repair may greatly endanger the user (electric shock, fire risk) and will invalidate your warranty.

After consulting the Hotline/Service Desk, you may remove and install the components described in this chapter yourself.

If you remove and install components without consulting the Hotline/Service Desk, then the warranty of your notebook will be voided.

Notes on installing and removing boards and components

- Switch the notebook off and pull the power plug out of the mains socket.
- Always remove the battery.
- Take care when you use the locking mechanisms on the battery and any other component.
- Never use sharp objects such as screwdrivers, scissors or knives as leverage to remove covers.

Boards with electrostatic sensitive devices (ESD) are marked with the label shown.

When handling boards fitted with ESDs, you must always observe the following points:

- You must always discharge static build up (e.g. by touching a grounded object) before working.
- The equipment and tools you use must be free of static charges.
- Remove the power plug from the mains supply before inserting or removing boards containing ESDs.
- Always hold boards with ESDs by their edges.
- Never touch pins or conductors on boards fitted with ESDs.

Preparing to remove components

If you are going to remove or change system components, prepare for the removal as follows:

Please observe the safety information in chapter "Important notes", Page 12.

Remove the power plug from the mains outlet !

► Switch the device off.

The device must not be in energy-saving mode !

► Close the LCD screen.
► Remove all the cables from the device.
► Turn the device over and place it on a stable, flat and clean surface. If necessary, lay an anti-slip cloth on this surface to prevent the device from being scratched.
► Remove the battery (see "Removing the battery", Page 55).

Installing and removing memory expansion

If you are asked by the Hotline/Service Desk to remove and install the memory expansion yourself, proceed as follows:

Please observe the safety information in chapter "Important notes", Page 12.

When installing/removing memory modules, the battery must be removed from the notebook and the notebook must not be connected to the power supply, see "Preparing to remove components", Page 91.

Only use memory expansion modules that have been approved for your notebook (see "Technical data", Page 106).

Never use force when installing or removing a memory extension.

Make sure that foreign objects do not fall into the memory extension compartment.

You must open the service compartment to remove or install a memory module. On some devices, opening the compartment may expose other components. These components should be removed and replaced only by authorised specialists. Therefore, be sure to observe the following:

Individual components can become very hot during operation. Therefore, we recommend that you wait one hour after switching off the notebook before removing or installing memory modules. Otherwise, there is a risk of suffering burns!

As some components are exposed that are sensitive to static electricity, please take note of chapter "Notes on installing and removing boards and components", Page 90.

Removing a cover

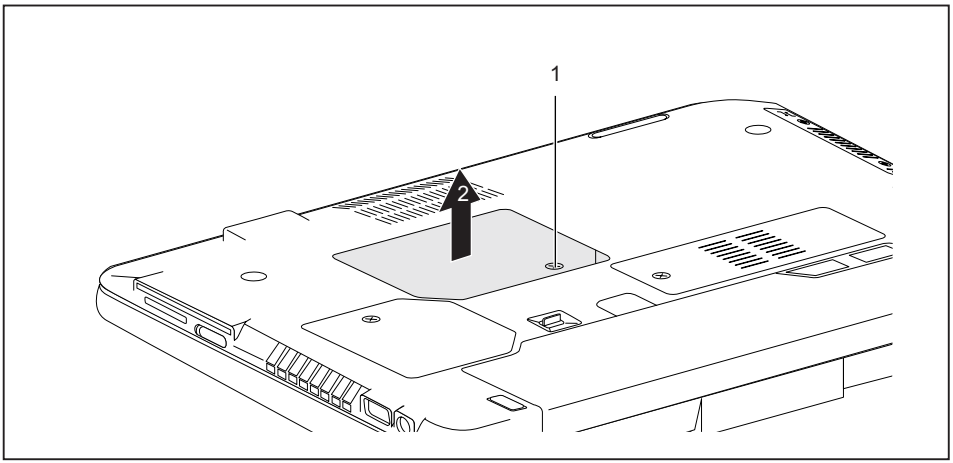

► Remove the screw (1).
► Pull off the cover from the notebook in the direction of the arrow (2).

Removing memory modules

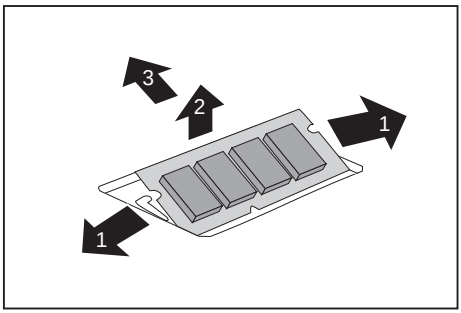

► Carefully push the two mounting clips outwards (1).
↳ The memory module snaps upwards (2).
► Pull the memory module out of its slot in the direction of the arrow (3).

Installing a memory module

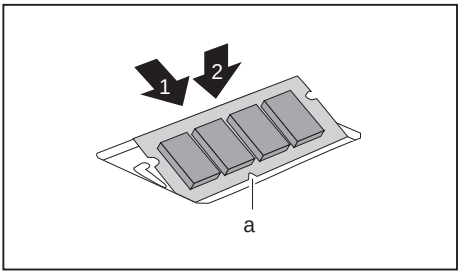

- ► Insert the memory module with the contacts and the recess (a) facing the slot (1).
- ► Carefully push the memory module downwards until you feel it click into place (2).

Attaching the cover

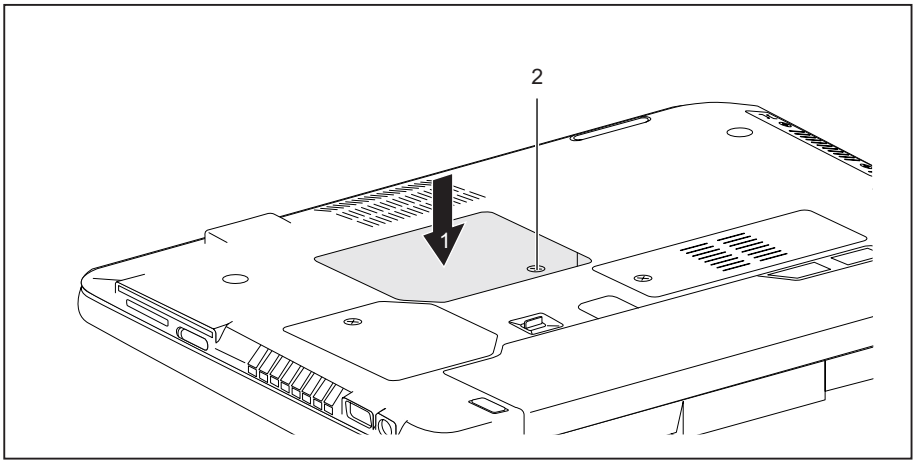

- ► Place the cover into position, following the direction of the arrow (1).
- ► Fasten the cover with the screw (2).
- ► Install the battery again (see "Removing and installing the battery", Page 55).
- ► Turn the notebook the right way up again and place it on a flat surface.
- ► Reconnect the cables that were previously disconnected.

Removing and installing the hard disk

Removing a hard disk

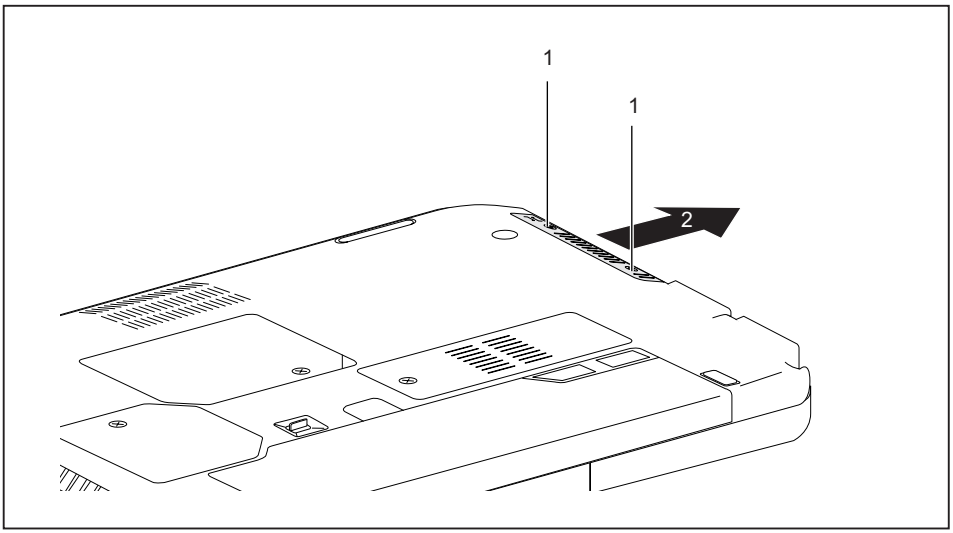

► Remove the screws (1).

Keep the screws in a safe place. If you are removing more than one component at the same time, store the screws for the individual components separate from each other. If you install the wrong screws, components may be damaged.

► Push the hard disk out of the notebook in the direction of the arrow (2).

Installing a hard disk

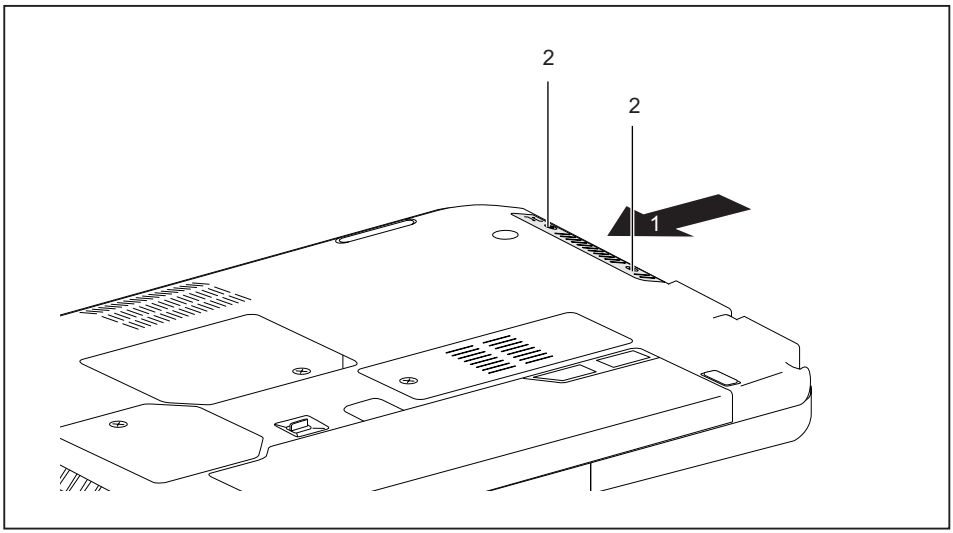

► Place the hard disk on its mounting location (1).
► Fasten the screws (2).

Finishing component removal

After you have removed or changed the system components as you required, please prepare your device for operation again as follows:

► Install the battery again (see "Installing the battery", Page 56).
► Turn the notebook the right way up again and place it on a flat surface.
► Reconnect the cables that you disconnected before.

Settings in BIOS Setup Utility

The *BIOS Setup Utility* allows you to set the system functions and the hardware configuration for the notebook.

When it is delivered, the notebook is set to factory default settings. You can change these settings in *BIOS Setup Utility*. Any changes you make take effect as soon as you save and exit the *BIOS Setup Utility*.

The *BIOS Setup Utility* program contains the following menus:

About	Displays information relating to the BIOS, processor and notebook
System	Advanced system settings
Advanced	Configuration of various hardware components, such as mouse, keyboard, processor
Security	Password settings and security functions
Boot	Configuration of the start-up sequence
Exit	Exits the *BIOS Setup Utility*

Starting the BIOS Setup Utility

► Reboot the notebook (switch off/on or reboot the operating system).

↳ The following or a similar display appears on the screen at start-up:

```
<F2> BIOS Setup <F12> Boot Menu
```

► Press the function key F2.

► If a password has been assigned, enter the password and press the Enter key.

If you have forgotten the password, contact your system administrator or contact our customer service centre.

The *BIOS Setup Utility* starts.

Operating BIOS Setup Utility

Press the F1 key to display help on the operation of *BIOS Setup Utility*. The description of the individual settings is shown in the right-hand window of the *BIOS Setup Utility*.

With the F9 key you can load the default settings of the *BIOS Setup Utility*.

► Use the cursor keys ← or → to select the menu you wish to access to make changes.

↳ The menu is displayed on the screen.

► Select the option you want to change with the cursor keys ↑ or ↓.

► Press the Enter key.

► Press the ESC key to exit the selected menu.

► For future reference, make a note of the changes you have made (for example, in this manual).

Exiting BIOS Setup Utility

You need to select the desired option in the *Exit* menu and activate it by pressing the Enter key:

Exit Saving Changes - save changes and exit BIOS Setup Utility

► To save the current menu settings and exit the *BIOS Setup Utility*, select *Exit Saving Changes* and *Yes*.

↳ The notebook is rebooted and the new settings come into effect.

Exit Discarding Changes – Discard changes and exit BIOS Setup Utility

► To discard the changes, select *Exit Discarding Changes* and *Yes*.

↳ The settings in place when *BIOS Setup Utility* was called remain effective. *BIOS Setup Utility* is terminated and the notebook is rebooted.

Load Setup Defaults – Copy Standard Entries

► To copy the standard entries for all menus of the *BIOS Setup Utility*, choose *Load Setup Defaults* and *Yes*.

Discard Changes – Discard changes without exiting the BIOS Setup Utility

► To discard the changes you have made, select *Discard Changes* and *Yes*.

↳ The settings in place when *BIOS Setup Utility* was called remain effective. You can now make additional settings in the *BIOS Setup Utility*.

► If you want to exit*BIOS Setup Utility*with these settings, select *Exit Saving Changes* and *Yes*.

Save Changes - save changes without exiting the BIOS Setup Utility

► To save the changes, select *Save Changes* and *Yes*.

↳ The changes are saved. You can now make additional settings in the BIOS Setup Utility.

► If you want to exit BIOS Setup Utility with these settings, choose *Exit Saving Changes* and *Yes*.

Save Changes and Power Off

► To save the changes and switch off your device, select *Save Changes and Power Off* and *Yes*.

↳ The changes are saved. Your device is shut down.

Troubleshooting and tips

Refer to the safety information in the "Safety" manual when connecting or disconnecting cables.

If a fault occurs, try to correct it as described. If you fail to correct the problem, proceed as follows:

- ► Make a note of the steps and the circumstances that led to the fault. Also make a note of any error messages displayed.
- ► Switch the notebook off.
- ► Please contact the Hotline/Service Desk.

You can find the telephone numbers in the service desk list. Please have the following information ready when you call:

- The model name and serial number of the notebook. The serial number is located on a sticker on the underside of the notebook.
- Notes of any messages that appear on the screen and information on acoustic signals.
- Any changes you have made to the hardware or software since receiving the notebook.
- Any changes you have made to the *BIOS Setup* settings since receiving the notebook.
- Your system configuration and all peripheral devices connected to your system.
- Your sales contract.

Our notebooks have been designed primarily with mobile applications in mind. This means that considerable effort has been made to optimise components and equipment in terms of weight, space and energy requirements. Depending on the particular configuration you have purchased, it is possible that functionality may be slightly reduced compared to a desktop PC if you are running processor-intensive gaming software, e.g. games with intensive 3D graphics. Updating your hardware with drivers which have not been approved by Fujitsu Technology Solutions may result in performance losses, data losses or malfunction of the equipment. A list of approved drivers and current BIOS versions can be downloaded from: "http://ts.fujitsu.com/support/downloads.html"

Help if problems occur

Should you at any time have a problem with your computer that you can't solve yourself, in many cases you can quickly solve it by using the *SystemDiagnostics* program which is pre-installed on your computer.

The *SystemDiagnostics* program is already installed on devices which were delivered with a Windows operating system.

- ► To start the *SystemDiagnostics* program, click on *Startsymbol - Program - Fujitsu - SystemDiagnostics*.
- ► If a problem is found during a test run, the *SystemDiagnostics* program outputs a code (e.g. DIFS-Code YXXX123456789123).
- ► Make a note of the output DIFS code and the identity number of your device. The identity number can be found on the type rating plate on the back of the casing.
- ► For further clarification of the problem, contact the Service Desk for your country (see the Service Desk list or visit the Internet at "http://ts.fujitsu.com/support/servicedesk.html"). When you do this, please have ready the identity number and serial number of your system and the DIFS code.

Restoring the hard disk contents under Windows

You can use the "Windows Recovery CD" (optionally available) and the "Drivers & Utilities CD/DVD" to reinstall the operating system.

The instructions are provided on the case of the Recovery CD.

During the reinstall process your personal files and any installed programs will be deleted. We advise you to backup your files to an external hard drive, or CD / DVD disk before you start.

- ► Switch the notebook on.
- ↳ The following display briefly appears on the screen during start-up:
  <ESC>Diagnostic screen <F12>Boot Menu <F2>BIOS Setup
- ► When this message appears, press the function key F12.
- ► Insert the "Windows Recovery CD" into the optical drive.
- ► Select *CD-ROM* and press the Enter key.
- ► Follow the instructions on the screen.
  After the installation you must install all the drivers again. Some installed hardware components will not be correctly supported until this has been done.
- ► Insert the "Drivers & Utilities" CD/DVD into the optical drive. The CD starts automatically.
- ► Click on the *Desk Update* button.
- ► Select *Automatic driver installation (Express)* and click on *Start installation*.
- ► Follow the instructions on the screen.
- ► Restart your notebook when the driver installation is completed.

The notebook’s date or time is incorrect

Cause	Troubleshooting
Time and date are incorrect.	► With the *BIOS-Setup-Utility*, you can set the date and time in the *main* menu.

If the date and time are repeatedly incorrect when you switch on the notebook, the built-in battery that supplies the internal clock has failed.

► Please contact your sales outlet or our Hotline/Service Desk.

Battery indicator does not illuminate

Cause	Fault elimination
The battery is not installed correctly.	► Switch the notebook off. ► Check whether the battery is installed correctly in its compartment. ► Switch the notebook on.
The battery is fully discharged.	► Charge the battery. **or** ► Install a charged battery. **or** ► Connect the notebook to a mains outlet using the mains adapter.

When certain characters are entered on the keyboard, only numerals are written

Cause	Troubleshooting
The virtual numeric keypad of your device is activated, see "Virtual numeric keypad", Page 49	► Press the Num key.

The notebook’s LCD screen remains blank

Cause	Troubleshooting
Monitor is switched off.	► Press a key or touch the touchpad.
External monitor or television set connected.	► Press the key combination to switch the screen output, see "Key combinations", Page 50.

The LCD screen is difficult to read

Cause	Troubleshooting
Reflected glare	► Turn the notebook or alter the tilt of the LCD screen. ► Increase the brightness of the screen.

The external monitor remains blank

Cause	Troubleshooting
Monitor is switched off.	► Switch the external monitor on.
Power saving has been activated (monitor is blank).	► Press any key to continue.
Brightness is set to dark.	► Adjust the brightness of the monitor.
Screen output is set to the notebook's LCD screen	► Press the key combination to switch the screen output, see "Key combinations", Page 50.
The external monitor's power cable or data cable is not connected properly.	► Switch off the external monitor and the notebook. ► Check whether the power cable is plugged properly into the external monitor and into the power socket. ► Check whether the data cable is properly connected to the notebook and the external monitor (if it is plugged in with a connector). ► Switch on the external monitor and the notebook.

The external monitor is blank or the image is unstable

Cause	Troubleshooting
The wrong external monitor has been selected or the wrong screen resolution has been set for the application program.	► Terminate the application program in Windows by pressing Alt + F4. If the fault persists after closing the program, use the key combination for switching the screen output (see "Key combinations", Page 50) to switch over to the notebook's LCD screen. Change the following setting: ► Set the screen resolution: Set the screen resolution as described in the documentation for your operating system. ► Select monitor: Select monitor 1 or 2 as described in the documentation for your operating system.

The cursor does not correctly follow the pen movements

Cause	Fault elimination
Pen incorrectly calibrated	**Windows XP** ► Calibrate the pen as shown under *Tablet and Pen Settings* in the Control Panel, see "Setting the pen", Page 42 and "Calibrating the pen", Page 42. **Windows 7** ► Calibrate the pen as shown under *Hardware and Sound / Tablet PC Settings* in the Control Panel, see "Setting the pen", Page 42 and "Calibrating the pen", Page 42.

The notebook cannot be started

Cause	Troubleshooting
The battery is not installed correctly.	► Check whether the battery is installed correctly in its compartment. ► Switch the notebook on.
The battery is dead.	► Charge the battery. **or** ► Insert a charged battery. **or** ► Connect the mains adapter to the notebook.
The power adapter is not connected correctly.	► Check whether the mains adapter is connected correctly to the notebook. ► Switch the notebook on.

The notebook stops working

Cause	Troubleshooting
Notebook is in energy saving mode.	► Leave energy saving mode.
An application programme has caused the malfunction.	► Close the application program or restart the notebook (by restarting the operating system or switching the device off and back on again).
The battery is dead.	► Charge the battery. **or** ► Insert a charged battery. **or** ► Connect the mains adapter to the notebook.

The printer does not print

Cause	Troubleshooting
The printer is not switched on.	► Make sure that the printer is switched on and ready for operation (refer to the documentation supplied with the printer).
The printer is not connected correctly.	► Check that the data cable connecting the notebook to the printer is properly connected.
The printer driver is faulty or not correctly installed, or it is the wrong printer driver.	► Check that the data cable connecting the notebook to the printer is properly connected. ► Check whether the correct printer driver is loaded (refer to the printer documentation).

The radio connection to a network does not work

Cause	Troubleshooting
The wireless component is disabled.	► Switch the radio component on (see "Switching the wireless components on and off", Page 62).
The wireless component is enabled. Despite this, the wireless connection to a network does not work.	► Check whether the radio connection is switched on via the software. ► Further information on using the radio component can be found in the help files.

The battery discharges too quickly

Cause	Troubleshooting
The battery is either too hot or too cold. In this case the battery indicator flashes.	► Bring the notebook up/down to a normal temperature again. ► If the operating time of the battery life is extremely short, the battery is probably too old. Replace battery if necessary.
You may have an application running that consumes a great deal of power due to frequent accessing of the hard disk or optical drive.	► Use the mains adapter as frequently as possible.
The maximum brightness may have been set for the screen.	► Set the screen slightly darker with the key combination for *Decreasing the screen brightness* in order to reduce the amount of power being drawn.

Acoustic warnings

Cause	Troubleshooting
A beep sounds every few seconds. The battery is almost flat.	► Charge the battery.

Error messages on the screen

This section describes the error messages generated by the BIOS Setup. Error messages displayed by the operating system or programmes are described in the relevant documentation.

If the error message appears repeatedly, despite troubleshooting measures, please contact the place of purchase or our customer service centre.

Error message/cause	Resolution
CMOS battery bad If the error message occurs repeatedly, the buffer battery in the notebook is flat.	► Contact your sales outlet or our customer service centre.
System CMOS checksum bad - default configuration used The system configuration information is incorrect.	► Switch the notebook off. ► Switch the notebook on. ► Press the function key F2 to access the *BIOS Setup*. ► In the *BIOS Setup*, select the *Exit* menu. ► Select the entry *Load Setup Defaults*. ► Select *OK* and press the Enter key.

Error message/cause	Resolution
Extended memory failed at offset: xxxx Failing Bits: zzzz zzzz When testing the extended memory an error has resulted at the address xxxx.	► Check whether the additional memory module has been inserted correctly.
Failure Fixed Disk n The settings of the hard disk drive are incorrect.	► Start the *BIOS Setup* (*Primary Master* submenu) and select the correct settings.
Keyboard controller error	► Switch the notebook off with the ON/OFF switch. ► Wait 3 - 5 seconds and switch on the notebook again.
Keyboard error	If you are using an external keyboard: ► Check the connection and reboot the notebook.
nn Stuck key	► Make sure that no key is pressed.
Operating system not found	► Check in the *BIOS Setup* whether your hard disk has been set correctly. ► Make sure that the operating system is installed on the corresponding drive.
Press <F1> to resume, <F2> to SETUP This error message appears if an error occurs during the self-test before starting the operating system.	► Press the F1 function key to start the operating system. ► Press the function key F2 to access the *BIOS Setup*.
Previous boot incomplete - Default configuration used Due to an error during the previous system boot, default values were used for certain settings. Check the settings in the BIOS Setup.	► Press the F1 function key when prompted to do so.
Real time clock error	► Contact your sales outlet or our customer service centre.
nnnnK Shadow RAM failed at offset: xxxx Failing Bits: zzzz	► Contact your sales outlet or our customer service centre.
System battery is dead - Replace and run SETUP	► Contact your sales outlet or our customer service centre.
System cache error - Cache disabled	► Contact your sales outlet or our customer service centre.
System timer error	► Contact your sales outlet or our customer service centre.

Technical data

Notebook

General	
Processor	Intel Core i3 Prozessor 380UM (1.33 GHz), 3 MB Intel Core i5 Prozessor 560UM (1.33 GHz), 3 MB
Main memory (SO DIMM)	Maximum 8 GB DDR3 2 slots for 2 GByte or 4 GByte modules
Electrical data	
Safety regulations complied with	CE
Protection class	II
Maximum power consumption (when the notebook is switched on and the battery is charged):	60 W
LCD screen	
Size	10.1 inch/25.7 cm TFT
Resolution	1366 x 768/32 Bit, HD
Monitor technology	TFT display with LED backlight
Pixel class	II
Brightness control	12 levels
Digitizer and glass screen	Dual digitizer with touchscreen and anti-fingerprint coating
Graphics card	
Chip	UMA (CPU integrated)
Recommended screen resolution of the external CRT monitor (53.34 cm):	maximum 1920 x 1200 / 16.7 million colours at 85 Hz
Recommended screen resolution of the simultaneous monitor:	maximum 1280 x 800 / 16.7 million colours at 85 Hz
Dimensions	
Width x depth x height	270 mm x 189 mm x 37.4 mm (without rubber feet) 270 mm x 189 mm x 39.7 mm (with rubber feet)
Weight depending on configuration	from 1.35 kg
Input devices	
Keyboard	82 keys
Touchpad	2 keys
Tablet buttons	3 keys
Pen	1 active pen with push button
Slots	

SmartCard slot	1 x
Memory card slot	1 x SD card
SIM card slot (optional)	1 x
Ports	
Monitor port (analogue)	15-pin female connector
HDMI port	1 x 19 pins
LAN port	Socket, RJ45
Microphone port/Line In	3.5 mm stereo mini jack
Headphones port/Line Out	3.5 mm stereo mini jack
USB (Universal Serial Bus)	2 x USB 2.0
Kensington Lock	1 x
Ambient conditions	
Environment class DIN IEC 721	7K1
Mechanism class DIN IEC 721	7M2
Operating temperature	5 °C .... 35 °C
Transport temperature (2K2)	–15 °C .... 60 °C

Rechargeable battery

You can find information on the batteries used in your device on the Internet at "http://ts.fujitsu.com/support".

	3-cell rechargeable battery	6-cell rechargeable battery
Rated voltage	10.8 V	10.8 V
Rated capacity	31.3 Wh	62.6 Wh
Nominal power	2,900 mAh	5.800 mAh

The operating time depends on the device configuration, the active applications and the energy saving settings.

Mains adapter

Primary	
Rated voltage	100 V to 240 V (automatic)
Rated frequency	50 Hz to 60 Hz (automatic)
Max. rated current	0.7 – 1.2 A
Secondary	
Nominal power	60 W
Rated voltage	19 V
Max. rated current	3.16 A

An additional mains adapter or power cable can be ordered at any time.

Manufacturer’s notes

Energy Star

Devices which are certified according to the Energy Star environmental mark, fully comply with the standards on delivery. Note that the installation of hardware or software after delivery as well as changes to the BIOS settings or energy settings can increase the energy consumption of your device. In these cases, the characteristics ensured by the Energy Star environmental mark can no longer be guaranteed.

Devices which are certified according to the Energy Star environmental mark help to save money and reduce the emission of greenhouse gases.

Power Management settings on delivery:

- Monitor switched off after < 15 minutes of inactivity
- Automatic activation of energy saving mode (ACPI S3): < 30 minutes of inactivity

Detailed information about the requirements of the "Energy Star" environmental mark and the products which satisfy these requirements can be found on the Internet at "https://www.energystar.gov/".

Disposal and recycling

Information about this subject can be found on your notebook or on our Internet pages.

Declarations of Conformity

The "Declarations of Conformity" for the device can be found at our Internet address under: "http://ts.fujitsu.com/ce".

Fujitsu Technology Solutions hereby declares that your device is in compliance with the essential requirements and other relevant provisions of Directive 1999/5/EC.

CE marking

CE marking for devices with radio component

This equipment complies with the requirements of Directive 1999/5/EC of the European Parliament and Commission from 9 March, 1999 governing Radio and Telecommunications Equipment and mutual recognition of conformity.

This equipment can be used in the following countries:

Belgium	Bulgaria	Denmark	Germany
Estonia	Finland	France	Greece
UK	Ireland	Iceland	Italy
Latvia	Liechtenstein	Lithuania	Luxembourg
Malta	The Netherlands	Norway	Austria
Poland	Portugal	Rumania	Sweden
Switzerland	Slovakia	Slovenia	Spain
Czech Republic	Hungary	Cyprus	

Contact the corresponding government office in the respective country for current information on possible operating restrictions. If your country is not included in the list, then please contact the corresponding supervisory authority as to whether the use of this product is permitted in your country.

Regulatory notices

If there is no FCC logo and also no FCC ID on the device then this device is not approved by the Federal Communications Commission (FCC) of the USA. Although it is not explicitly forbidden to travel in the US trading area carrying this device, to avoid trouble at customs clearance, Fujitsu Technology Solutions GmbH recommends not to bring this device into the US trading area.

Regulatory information for notebooks without radio device

NOTICE:

Changes or modifications not expressly approved by Fujitsu Technology Solutions could void this user's authority to operate the equipment.

Notice to Users of Radios and Television

These limits are designed to provide reasonable protection against harmful interference in a residential installation. This equipment generates, uses, and can radiate radio frequency energy and, if not installed and used in accordance with the instructions, may cause harmful interference to radio communications. However, there is no guarantee that interference will not occur in a particular installation. If this equipment does cause harmful interference to radio or television reception, which can be determined by turning the equipment off and on, the user is encouraged to try to correct the interference by one or more of the following measures:

- Reorient or relocate the receiving antenna.
- Increase the separation between the equipment and receiver.

- Connect the equipment into an outlet that is on a different circuit than the receiver.
- Consult the dealer or an experienced radio/TV technician for help.

Notice to Users of the US Telephone Network

Your notebook may be supplied with an internal modem which complies with Part 68 of the FCC rules. On this notebook is a label that contains the FCC Registration Number and the Ringer Equivalence Number (REN) for this equipment among other information. If requested, the user must provide their telephone company with the following information:

1. The telephone number to which the notebook is connected.
2. The Ringer Equivalence Number (REN) for this equipment.
3. The equipment requires a standard modular jack type USOC RJ-11C which is FCC Part 68 compliant.
4. The FCC Registration Number.

This equipment is designed to be connected to the telephone network or premises wiring using a standard modular jack type USOC RJ-11C which is FCC Part 68 compliant and a line cord between the modem and the telephone network with a minimum of 26AWG.

The REN is used to determine the number of devices that you may connect to your telephone line and still have all of those devices ring when your number is called. Too many devices on one line may result in failure to ring in response to an incoming call. In most, but not all, areas the sum of the RENs of all of the devices should not exceed five (5). To be certain of the number of devices you may connect to your line, as determined by the RENs, contact your local telephone company. If this equipment causes harm to the telephone network, your telephone company may discontinue your service temporarily. If possible, they will notify you in advance. If advance notice is not practical they will notify you as soon as possible. You will also be advised of your right to file a complaint with the FCC.

This fax modem also complies with fax branding requirements per FCC Part 68.

Your telephone company will probably ask you to disconnect this equipment from the telephone network until the problem is corrected and you are sure that the equipment is not malfunctioning. This equipment may not be used on coin-operated telephones provided by your telephone company. Connection to party lines is subject to state tariffs. Contact your state's public utility commission, public service commission or corporation commission for more information.

This equipment includes automatic dialing capability. When programming and/or making test calls to emergency numbers:

- Remain on the line and briefly explain to the dispatcher the reason for the call.
- Perform such activities in off-peak hours, such as early morning or late evening.

FCC rules prohibit the use of non-hearing aid compatible telephones in the following locations or applications:

- All public or semi-public coin-operated or credit card telephones.
- Elevators, highways, tunnels (automobile, subway, railroad or pedestrian) where a person with impaired hearing might be isolated in an emergency.
- Places where telephones are specifically installed to alert emergency authorities such as fire, police or medical assistance personnel.
- Hospital rooms, residential health care facilities, convalescent homes and prisons.
- Hotel, motel or apartment lobbies.
- Stores where telephones are used by patrons to order merchandise.

- Public transportation terminals where telephones are used to call taxis or to reserve lodging or rental cars.
- In hotel and motel rooms as at least ten percent of the rooms must contain hearing aid-compatible telephones or jacks for plug-in hearing aid compatible telephones which will be provided to hearing impaired customers on request.

DOC (Industry CANADA) notices

Notice to Users of Radios and Television

This Class B digital apparatus meets all requirements of Canadian Interference-Causing Equipment Regulations.

CET appareil numérique de la class B respecte toutes les exigence du Réglement sur le matérial brouilleur du Canada.

Notice to Users of the Canadian Telephone Network

NOTICE:

This equipment meets the applicable Industry Canada Terminal Equipment Technical Specifications. This is confirmed by the registration number. The abbreviation, IC, before the registration number signifies that registration was performed based on a Declaration of Conformity indicating that Industry Canada technical specifications were met. It does not imply that Industry Canada approved the equipment. Before connecting this equipment to a telephone line the user should ensure that it is permissible to connect this equipment to the local telecommunication facilities. The user should be aware that compliance with the certification standards does not prevent service degradation in some situations.

Repairs to telecommunication equipment should be made by a Canadian authorised maintenance facility. Any repairs or alterations not expressly approved by Fujitsu or any equipment failures may give the telecommunication company cause to request the user to disconnect the equipment from the telephone line.

NOTICE:

The Ringer Equivalence Number (REN) for this terminal equipment is 0.0. The REN assigned to each terminal equipment provides an indication of the maximum number of terminals allowed to be connected to a telephone interface. The termination on an interface may consist of any combination of devices subject only to the requirement that the sum of the Ringer Equivalence Numbers of all the devices does not exceed five.

CAUTION:

For safety, users should ensure that the electrical ground of the power utility, the telephone lines and the metallic water pipes are connected together. Users should NOT attempt to make such connections themselves but should contact the appropriate electric inspection authority or electrician. This may be particularly important in rural areas.

Avis Aux Utilisateurs Du Réseau Téléphonique Canadien

AVIS : Le présent matériel est conforme aux spécifications techniques d'Industrie Canada applicables au matériel terminal. Cette conformité est confirmée par le numéro d'enregistrement. Le sigle IC, placé devant le numéro d'enregistrement, signifie que l'enregistrement s'est effectué conformément à une déclaration de conformité et indique que les spécifications techniques d'Industrie Canada ont été respectées. Il n'implique pas qu'Industrie Canada a approuvé le matériel.

Avant de connecter cet équipement à une ligne téléphonique, l'utilisateur doit vérifier s'il est permis de connecter cet équipement aux installations de télécommunications locales. L'utilisateur est averti que même la conformité aux normes de certification ne peut dans certains cas empêcher la dégradation du service.

Les réparations de l'équipement de télécommunications doivent être effectuées par un service de maintenance agréé au Canada. Toute réparation ou modification, qui n'est pas expressément approuvée par Fujitsu, ou toute défaillance de l'équipement peut entraîner la compagnie de télécommunications à exiger que l'utilisateur déconnecte l'équipement de la ligne téléphonique.

AVIS : L'indice d'équivalence de la sonnerie (IES) du présent matériel est de 0.0. L'IES assigné à chaque dispositif terminal indique le nombre maximal de terminaux qui peuvent être raccordés à une interface téléphonique. La terminaison d'une interface peut consister en une combinaison quelconque de dispositifs, à la seule condition que la somme d'indices d'équivalence de la sonnerie de tous les dispositifs n'excède pas 5.

AVERTISSEMENT:

Pour assurer la sécurité, les utilisateurs doivent vérifier que la prise de terre du service d'électricité, les lignes télphoniques et les conduites d'eau métalliques sont connectées ensemble. Les utilisateurs NE doivent PAS tenter d'établir ces connexions eux-mêmes, mais doivent contacter les services d'inspection d'installations électriques appropriés ou un électricien. Ceci peut être particulièrement important en régions rurales.

UL Notice

This unit requires an AC adapter to operate. Only use a UL Listed Class 2 adapter. The correct output rating is indicated on the AC adapter label. Refer to the illustration below for the correct AC Adapter output polarity:

CAUTION:

To reduce the risk of fire, use only 26AWG or larger telecommunications line cord.

For Authorized Repair Technicians Only

CAUTION:

For continued protection against risk of fire, replace only with the same type and rating fuse.

WARNING:

Danger of explosion if Lithium (CMOS) battery is incorrectly replaced. Replace only with the same or equivalent type recommended by the manufacturer.

Dispose of used batteries according to the manufacturer's instructions.

FCC regulatory information for notebooks with radio device

Federal Communications Commission statement

This device complies with Part 15 of FCC Rules. Operation is subject to the following two conditions: (1) this device may not cause interference, and

(2) this device must accept any interference, including interference that may cause undesired operation of this device.

FCC Interference Statement

This equipment has been tested and found to comply with the limits for a Class B digital device, pursuant to Part 15 of the FCC Rules. These limits are designed to provide reasonable protection against harmful interference in a residential installation. This equipment generates, uses, and can radiate radio frequency energy. If not installed and used in accordance with the instructions, it may cause harmful interference to radio communications.

However, there is no guarantee that interference will not occur in a particular installation.

If this equipment does cause harmful interference to radio or television reception, which can be determined by turning the equipment off and on, the user is encouraged to try to correct the interference by one or more of the following measures:

1. Reorient or relocate the receiving antenna.
2. Increase the distance between the equipment and the receiver.
3. Connect the equipment to an outlet on a circuit different from the one the receiver is connected to.
4. Consult the dealer or an experienced radio/TV technician for help.

Please note the following regulatory information related to the optional radio device.

FCC Radio Frequency Exposure statement

This radio device has been evaluated under FCC Bulletin OET 65C and found compliant with the requirements as set forth in CFR 47 Sections 2.1091, 2.1093, and 15.247 (b) (4) addressing RF Exposure from radio frequency devices. The radiated output power of this radio device is far below the FCC radio frequency exposure limits. Nevertheless, this device shall be used in such a manner that the potential for human contact during normal operation is minimized. When using this device, a certain separation distance between antenna and nearby persons must be maintained to ensure RF exposure compliance. In order to comply with RF exposure limits established in the ANSI C95.1 standards, the distance between the antennas and the user should not be less than 20 cm (8 inches).

Regulatory Notes and Statements

Radio device, health and authorisation for use

Radio-frequency electromagnetic energy is emitted from the wireless devices. The energy levels of these emissions, however, are far much less than the electromagnetic energy emissions from wireless devices such as mobile phones. Radio devices are safe for use by consumers because they operate within the guidelines found in radio frequency safety standards and recommendations.

The use of the radio devices may be restricted in some situations or environments, such as:

- on board an airplane, or
- in an explosive environment, or
- in situations where the interference risk to other devices or services is perceived or identified as harmful.

In cases in which the policy regarding use of radio devices in specific environments is not clear (e.g., airports, hospitals, chemical/oil/gas industrial plants, private buildings), obtain authorization to use these devices prior to operating the equipment.

Regulatory Information/Disclaimers

Installation and use of this radio device must be in strict accordance with the instructions included in the user documentation provided with the product. Any changes or modifications made to this device that are not expressly approved by the manufacturer may void the user’s authority to operate the equipment. The manufacturer is not responsible for any radio or television interference caused by unauthorized modification of this device, or the substitution or attachment of connecting cables and equipment other than those specified by the manufacturer. It is the responsibility of the user to correct any interference caused by such unauthorized modification, substitution or attachment. The manufacturer and its authorized resellers or distributors will assume no liability for any damage or violation of government regulations arising from failure to comply with these guidelines.

Export restrictions

This product or software contains encryption code which may not be exported or transferred from the US or Canada without an approved US Department of Commerce export license. This device complies with Part 15 of FCC Rules, as well as ICES 003 B / NMB 003 B. Operation is subject to the following two conditions:

(1) this device may not cause harmful interference, and

(2) this device must accept any interference received, including interference that may cause undesirable operation.

Modifications not expressly authorised by Fujitsu Technology Solutions may invalidate the user’s right to operate this equipment.

Index

A
A beep sounds every second 100
Acoustic error messages 104
Administrator functions 79
Anti-theft protection 67
Audio devices, connecting 89
Audio ports 89

B
Backspace 48
Bass loudspeaker (subwoofer) 59
Battery
  battery life 54
  caring for and maintaining 54
  charge level 54, 57
  charging 54
  self-discharge 54
  storage 54
Battery status meter 54
Battery:
  discharges too quickly 104
BIOS Setup Utility
  calling 96
  exiting 97
  operating 96
  protecting with password 68
  settings 96
Bluetooth
  Switching off module 62
  Switching on module 62
Board 90
Buffer battery, load 100
Buttons 47

C
Caps Lock 48
CE marking 110
Charging capacity, battery 54
Cleaning 14
Components
  installing / removing 90
Configuration, BIOS Setup Utility 96
Connecting audio devices 89
Connecting headphones 89
Crystal View display
  cleaning 14
Cursor control keys 48
Cursor keys 48

D
Date is incorrect 100
Declaration of conformity 109
Device
  setting up 16
Devices
  connecting 85
  disconnecting 85
Display orientation
  selecting 25
DOC (INDUSTRY CANADA) NOTICES 112

E
Energy
  energy saving 12
Energy saving 12
Energy saving mode
  leaving 103
Enter 48
Enter key 48
Error message:
  on the screen 104
Error messages
  Mainboard 83
Error messages on the screen 104
Errors
  Acoustic warnings 104
ESD 90
Ethernet LAN 64

F
F10, function key 76
F2, function key 82
F3, function key 82
F5, function key 76, 78
F6, function key 76, 78
F7, function key 76
F8, function key 76, 78
F9, function key 76, 78
Fault
  correction 98
Fingerprint sensor 67
  configure 67
First-time setup 15
Fn + F10 51
Fn key 48

G
Getting started 15

H
Hard disk:
restoring the contents 99
Hardware configuration 96
HDMI port 87

I
Important notes 12
Incorrect date/time 100
Installing SystemLock 74

K
Kensington MicroSaver 67
Keyboard 47
cleaning 14

L
Landscape orientation
screen 25
LCD screen
cleaning 14
difficult to read 101
notes 29
reflected glare 101
remains blank 100
LCD screen is too dark 100
Life, battery 54
Line feed 48
Loudspeakers 59

M
Main memory
see Adding memory 91
Mains adapter
connecting 16
setting up 16
Mechanical backup 67
Memory card
handling 58
inserting 58
removing 59
Memory expansion
installing 93
removing 92
Memory module
important notes 91
installing 93
removing 92
Microphone 59
Microphone, connecting 89
Mobile operation 13
Monitor
connecting 86
drifting display 101
remains blank 101
Monitor port
see VGA connection socket 86

N
Notebook
before you travel 13
cannot be started 102
cleaning 14
stops working 103
switching off 27
transporting 13
using 19
Notebook, operation 19
Notebook: switching on 22
Notes 12
boards 90
cleaning 14
disposal / recycling 109
energy saving 12
LCD screen 29
Safety 12
transport 13
Num Lock
indicator 49
Numeric keypad 47
see Virtual numeric keypad 49

O
Operating system
activating system protection 69
cancel system protection 69
protecting with password 69
Operating system, restoring 99

P
Packaging 15
Password
changing 69
entering 68
removing 69
Password protection 68
Peripheral devices
connecting 85
disconnecting 85
Portrait orientation
screen 25

Power
power consumption 57
power-management features 57
Power-on indicator 22
Preparing for operation 16
Printer does not print 103

R
Rechargeable battery 54
see Battery 54
Regulatory information
notebooks with radio device 114
Notebooks without radio device 110
Removing memory
see Adding memory 91
Return 48

S
Safety notes 12
Screen
no screen display 101
Screen port
see VGA connection socket 86
Security functions 65
SystemLock 70
Security functions,
SmartCard 70
Select the language: for handwriting recognition and keyboard 28
Selecting a location 16
Self-discharge, battery 54
Servicing 90
Setup
see BIOS Setup Utility 96
Shift 48
Shift key 48
Slot
Memory cards 58
SmartCard 71
access rights 72
PIN 72
PUK 72
user groups 73
Start key 48
Status indicators 19
Summer time 100
Supervisor password
changing 69
entering 68
removing 69
Suspend/Resume button 22
Switching on for the first time 17
Switching on the system 71
Symbols
indicators 19
System configuration 96
System expansion 91
see Adding memory 91
System settings, BIOS Setup Utility 96
SystemLock
switching on 82
SystemLock 2
installing 77

T
Tab key 48
The radio connection to a network does not work 103
Time not correct 100
Time, daylight savings 100
Tips 98
Toggle output screen 51
Touchpad 45
buttons 45
cleaning 14
dragging items 46
executing commands 45
moving the pointer 45
selecting an item 45
TPM 83
Transport
Transport damage 15
Transportation 13
Travel, notebook 13
Troubleshooting 98
Trusted Platform Module 83

U
Uninstalling
SystemLock 82
USB ports 88
User groups
installing 74
User password
changing 69
entering 68
removing 69
Using a Kensington Lock 67

V
VGA connection socket 86
Virtual numeric keypad 49
Volume control 59

W
Webcam 53
Wireless LAN
Switching off module 62
Switching on module 62