# FUJITSU CELSIUS H970

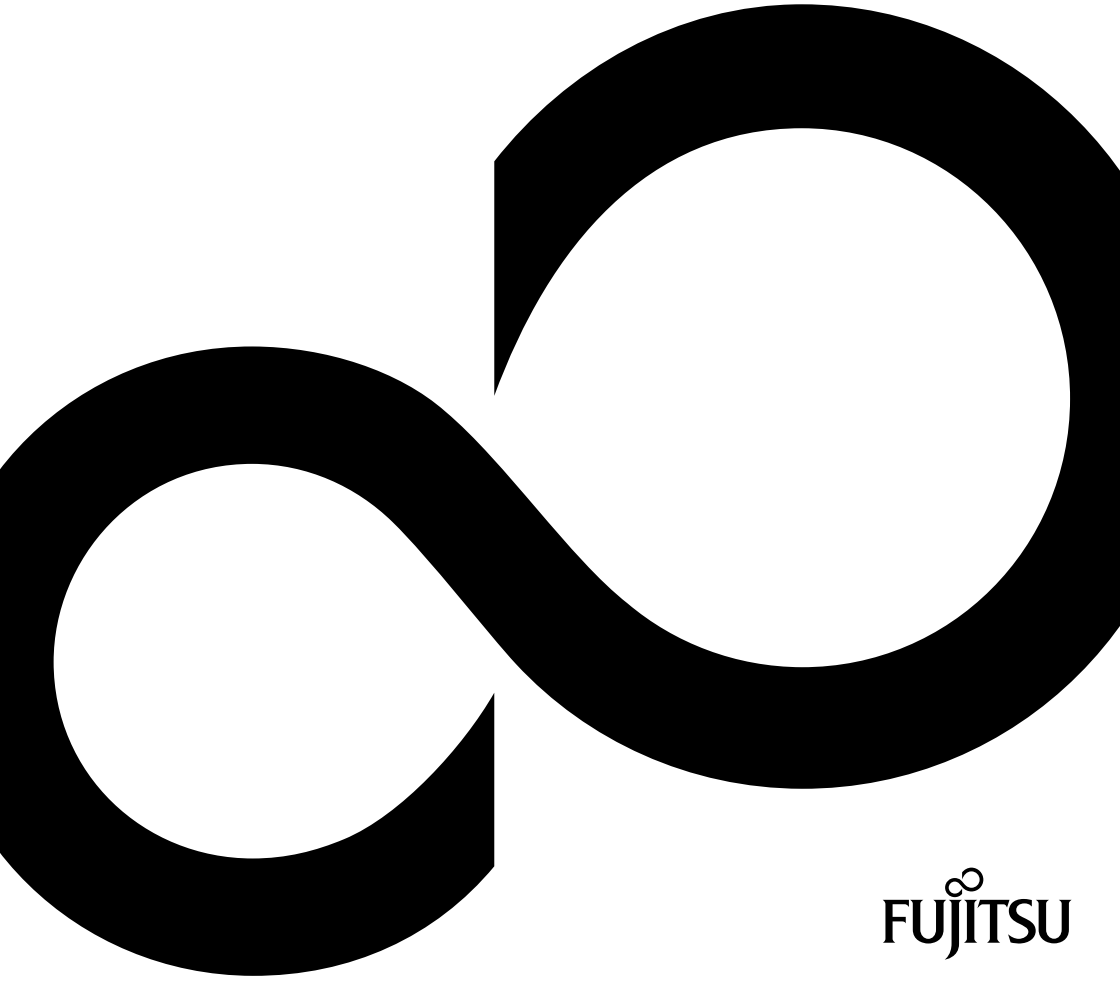

FUJITSU

# Congratulations on your purchase of an innovative product from Fujitsu.

The latest information about our products, tips, updates etc. can be found on the Internet at: "http://www.fujitsu.com/fts/"

You can find driver updates at: "http://support.ts.fujitsu.com/download"

Should you have any technical questions, please contact:

- our Hotline/Service Desk ("http://support.ts.fujitsu.com/contact/servicedesk")
- Your sales partner
- Your sales office

We hope you enjoy working with your new Fujitsu system!

**Published by / Contact address in the EU**

Fujitsu Technology Solutions GmbH

Mies-van-der-Rohe-Straße 8

80807 Munich, Germany

"http://www.fujitsu.com/fts/"

**Copyright**

© Fujitsu Technology Solutions GmbH 2017. All rights reserved.

**Publication Date**

04/2017

Order No.: A26391-K456-Z320-1-7619, edition 1

# FUJITSU CELSIUS H970

## Operating Manual


| | |
|---|---|
| **Innovative technology** | **7** |
| **Ports and controls** | **9** |
| **Important notes** | **12** |
| **First-time setup of your device** | **16** |
| **Working with the notebook** | **19** |
| **Security functions** | **44** |
| **Connecting external devices** | **50** |
| **Removing and installing components during servicing** | **57** |
| **Settings in BIOS Setup Utility** | **68** |
| **Troubleshooting and tips** | **71** |
| **Technical data** | **79** |
| **Manufacturer's notes** | **81** |
| **Index** | **82** |

**Remarks**

Information on the product description meets the design specifications of Fujitsu and is provided for comparison purposes. Several factors may cause the actual results to differ. Technical data is subject to change without prior notification. Fujitsu rejects any responsibility with regard to technical or editorial mistakes or omissions.

**Trademarks**

Fujitsu, the Fujitsu logo and CELSIUS are registered trademarks of Fujitsu Limited or its subsidiaries in the USA and other countries.

Kensington is a registered trademark of the ACCO brand.

Microsoft and Windows are trademarks or registered trademarks of Microsoft Corporation in the USA and/or other countries.

DVI is a registered trademark or unregistered trademark of the Digital Display Working Group.

All other trademarks specified here are the property of their respective owners.

**Copyright**

No part of this publication may be copied, reproduced or translated without the prior written consent of Fujitsu.

No part of this publication may be saved or transferred by any electronic means without the written approval of Fujitsu.

# Contents

**Innovative technology** ..... **7**
Further information ..... 7
Notational conventions ..... 8

**Ports and controls** ..... **9**

**Important notes** ..... **12**
Safety notes ..... 12
Additional safety notes for devices with wireless components ..... 13
Energy saving ..... 13
Energy saving under Windows ..... 13
Travelling with your notebook ..... 14
Before you travel ..... 14
Notebook: transporting ..... 14
Cleaning the notebook ..... 15

**First-time setup of your device** ..... **16**
Unpacking and checking the device ..... 16
Selecting a location ..... 17
Mains adapter connecting ..... 17
Switching on the device for the first time ..... 18

**Working with the notebook** ..... **19**
Status indicators ..... 19
Switching on the notebook ..... 21
Notebook: switching off ..... 21
Keyboard ..... 22
Separate number block ..... 24
Key combinations ..... 24
Country and keyboard settings ..... 26
Application keys ..... 26
Touchpad and touchpad buttons ..... 27
Moving the pointer ..... 27
Selecting an item ..... 27
Executing commands ..... 28
Dragging items ..... 28
LCD screen ..... 29
Webcam ..... 30
Rechargeable battery ..... 31
Charging, caring for and maintaining the battery ..... 31
Removing and installing the battery ..... 32
Using the power-management features ..... 34
Adjusting fan control ..... 34
Memory cards ..... 35
Supported formats ..... 35
Inserting the memory card ..... 35
Removing the memory card ..... 35
Loudspeakers and microphones ..... 36
SIM card ..... 37
Inserting the SIM card ..... 37
Removing the SIM card ..... 38
Wireless components LAN / Bluetooth / LTE (optional) ..... 39

Switching the wireless components on and off ... 39
Setting up WLAN access ... 39
Access via LTE (optional) ... 39
Ethernet and LAN ... 40
Your Port Replicator ... 41
Ports on the Port Replicator ... 41
Setting up the port replicator ... 42
Connecting the mains adapter to the Port Replicator ... 42
Connect the notebook to the port replicator ... 43
Disconnecting the notebook from the Port Replicator ... 43

**Security functions ... 44**
Configuring the fingerprint sensor ... 44
Using the Security Lock ... 45
Configuring password protection in BIOS Setup Utility ... 45
Protecting BIOS Setup Utility (supervisor and user password) ... 46
Password protection for booting of the operating system ... 47
Password protection for the hard disk ... 47
Trusted Platform Module - TPM ... 48
Enabling TPM ... 48
Disabling TPM ... 48
SmartCard reader ... 49
Inserting the SmartCard ... 49

**Connecting external devices ... 50**
Connecting an external monitor ... 51
Connecting USB devices ... 52
USB connection with charging function (USB Type-C™) ... 53
USB port with charging function (Anytime USB charge) ... 54
How to remove USB devices correctly ... 54
Connecting external audio devices ... 55
Headset port ... 55
Microphone port (on the optional port replicator) ... 55
Headphone jack (on the optional port replicator) ... 56

**Removing and installing components during servicing ... 57**
Notes on installing and removing boards and components ... 57
Preparing to remove components ... 58
Installing and removing memory expansion ... 58
Removing a cover ... 59
Removing memory modules ... 59
Installing a memory module ... 60
Attaching the cover ... 60
Inserting and removing the hard disk (HDD) and M.2 module ... 61
Removing a cover ... 61
Removing the hard disk (HDD) ... 62
Inserting the hard disk (HDD) ... 63
Removing the M.2-module (on mainboard) ... 64
Insert M.2-module (on mainboard) ... 64
Removing the M.2 module (under hard disk) ... 65
Inserting the M.2 module (under hard disk) ... 66
Attaching the cover ... 67
Finishing component removal ... 67

**Settings in BIOS Setup Utility** ..... **68**
Starting the BIOS Setup Utility ..... 68
Operating BIOS Setup Utility ..... 69
Exiting BIOS Setup Utility ..... 70
Exit Saving Changes - save changes and exit BIOS Setup Utility ..... 70
Exit Discarding Changes – Discard changes and exit BIOS Setup Utility ..... 70
Load Setup Defaults – Copy Standard Entries ..... 70
Discard Changes – Discard changes without exiting the BIOS Setup Utility ..... 70
Save Changes - save changes without exiting the BIOS Setup Utility ..... 70
Save Changes and Power Off ..... 70

**Troubleshooting and tips** ..... **71**
Help if problems occur ..... 71
Restoring the hard disk contents under Windows ..... 72
The notebook's date or time is incorrect ..... 72
The notebook's LCD screen remains blank ..... 73
The LCD screen is difficult to read ..... 73
The external monitor remains blank ..... 73
The external monitor is blank or the image is unstable ..... 74
The notebook cannot be started ..... 74
The notebook stops working ..... 75
The printer does not print ..... 75
The wireless connection to a network does not work ..... 75
Acoustic warnings ..... 76
SmartCard reader is not recognised. ..... 76
SmartCard PIN forgotten ..... 76
SmartCard lost ..... 76
Error messages on the screen ..... 77

**Technical data** ..... **79**
Notebook computer ..... 79
Rechargeable battery ..... 79
Mains adaptor (notebook computer) ..... 79
Mains adaptor (port replicator) ..... 80

**Manufacturer's notes** ..... **81**
Disposal and recycling ..... 81
Certification markings ..... 81

**Index** ..... **82**

# Innovative technology

... and ergonomic design make your device a reliable and convenient companion.

The device boots very quickly, is ready for immediate use and offers a particularly long operating time because of its high capacity battery.

With the user-friendly "BIOS Setup Utility" you can control your notebook's hardware and better protect your system against unauthorised access by using the powerful password properties.

Information on the connections and user components of your notebook can be found in "Ports and controls", Page 9.

## Further information

The Windows drivers for your device can be found on our Internet site. The factory installation of your device does not support any other operating system. Fujitsu Technology Solutions accepts no liability whatsoever if any other operating system is used.

Software oriented components of these instructions refer to Microsoft products, if they come within the scope of the delivery.

If you install other software products, pay attention to the operating instructions of the manufacturer.

# Notational conventions

| | |
|---|---|
| | Pay particular attention to text marked with this symbol. Failure to observe these warnings could pose a risk to health, damage the device or lead to loss of data. The warranty will be invalidated if the device becomes defective through failure to observe these warnings. |
| | Indicates important information for the proper use of the device. |
| ► | Indicates an activity that must be performed |
| ↳ | Indicates a result |
| **`This font`** | indicates data entered using the keyboard in a program dialogue or at the command line, e.g. your password (**`Name123`**) or a command used to start a program (**`start.exe`**) |
| `This font` | indicates information that is displayed on the screen by a program, e.g.: `Installation is complete.` |
| *This font* | Indicates<br>• terms and texts used in a software interface, e.g.: Click on *Save*<br>• names of programs or files, e.g. *Windows* or *setup.exe*. |
| "This font" | Indicates<br>• cross-references to another section, e.g. "Safety information"<br>• cross-references to an external source, e.g. a web address: For more information, go to "http://www.fujitsu.com/fts/"<br>• Names of CDs, DVDs and titles or designations for other materials, e.g.: "CD/DVD Drivers & Utilities" or "Safety/Regulations" manual |
| Key | indicates a key on the keyboard, e.g: F10 |
| **This font** | indicates terms and texts that are emphasised or highlighted, e.g.: **Do not switch off the device** |

# Ports and controls

This chapter presents the individual hardware components of your device. It gives an overview of the indicators and ports of the device. Please familiarise yourself with these components before you start to work with the device.

**Front**

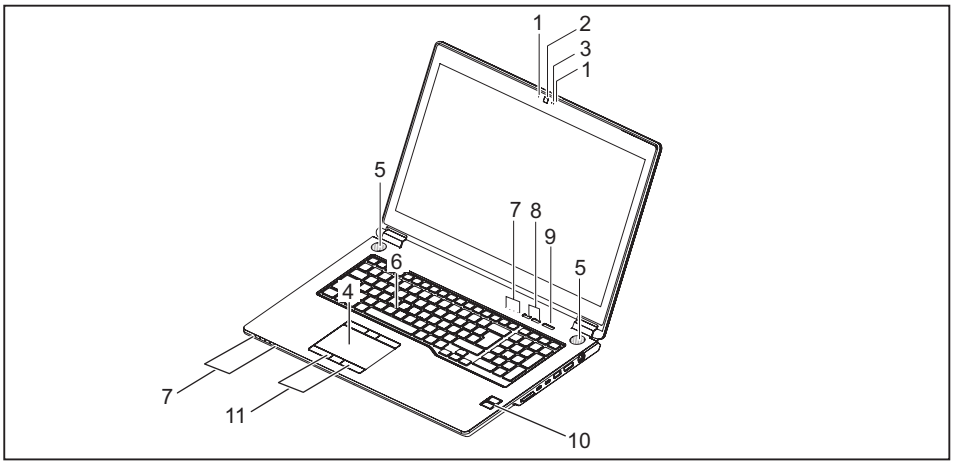


1 = Microphone
2 = Webcam
3 = Webcam LED
4 = Touchpad
5 = Loudspeakers
6 = TouchStick (optional)
7 = Status displays
8 = Application keys
9 = On/off switch
10 = Fingerprint sensor
11 = Touchpad buttons

**Left side**

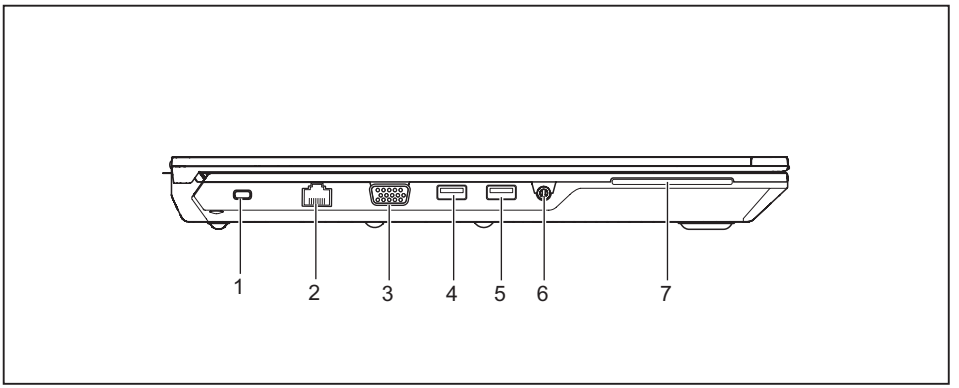


1 = Security Lock device
2 = LAN port
3 = Monitor port (VGA)
4 = USB 3.0 port with charging function (Anytime USB charge)
5 = USB 3.0 port
6 = Headset jack
7 = SmartCard reader

**Right side**

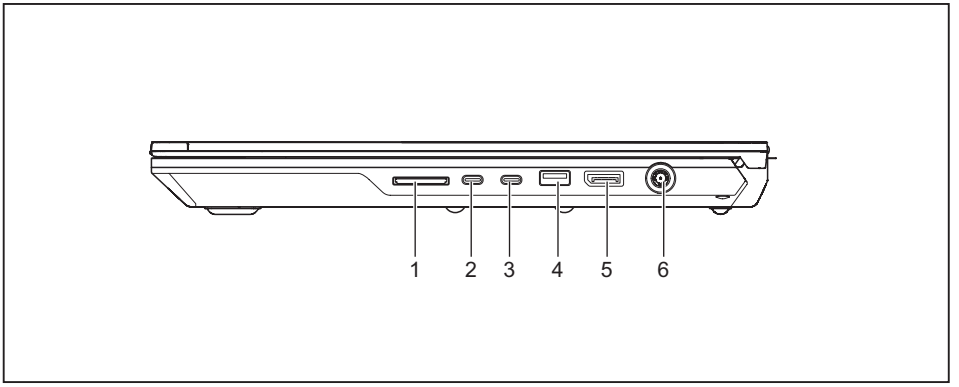


1 = Memory card slot
2 = USB 3.1 port with charging function (USB Type-C™) with Intel® Thunderbolt™3)
3 = USB 3.1 port with charging function (USB Type-C™) with Intel® Thunderbolt™3)
4 = USB port 3.0
5 = Display port
6 = DC input connector (DC IN)

**Bottom**

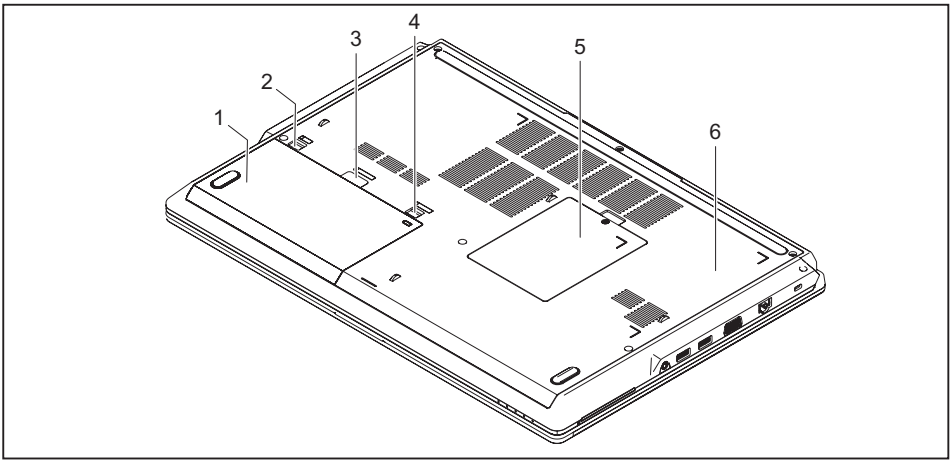


1 = Battery (SIM card underneath battery)
2 = Battery release 2
3 = Opening to remove the battery
4 = Battery release 1
5 = Memory service compartment
6 = Hard drive disk service compartment (1x HDD and 2x M.2 modules or 2x HDD and 1x M.2 module)

# Important notes

This chapter contains essential safety information which must be followed when working with your notebook. Other notes also provide useful information which will help you with your notebook.

## Safety notes

Please follow the safety notes provided in the "Safety/Regulations" manual as well as the safety notes given below.

Please pay special attention to the sections in the manual marked with the symbol on the left.

When connecting and disconnecting cables, observe the relevant notes in this operating manual.

Read the information on the ambient conditions in the "Technical data", Page 79 and "First-time setup of your device", Page 16 before preparing your notebook for use and switching it on for the first time.

When cleaning the device, please observe the relevant notes in the section "Cleaning the notebook", Page 15.

Pay attention to the additional safety notes for devices with wireless components provided in the "Safety/Regulations" manual.

Please refer to the notes in the chapter "Removing and installing components during servicing", Page 57.

This notebook complies with the relevant safety regulations for data processing equipment. If you have questions about using your notebook in a particular area, please contact your sales outlet or our Hotline/Service Desk.

# Additional safety notes for devices with wireless components

If a wireless component (Wireless LAN, Bluetooth, UMTS, LTE) is incorporated into your notebook, you must be sure to observe the following safety notes when using your notebook:

- Switch off the wireless components when you are in an aircraft or driving in a car.
- Switch off the wireless components when you are in a hospital, an operating room or near a medical electronics system. The transmitted radio waves can impair the operation of medical devices.
- Switch off the wireless components when you let the device get near flammable gases or into hazardous environments (e.g. petrol station, paintshops), as the transmitted radio waves can cause an explosion or a fire.

For information on how to switch wireless components on and off, see chapter "Switching the wireless components on and off", Page 39.

# Energy saving

Switch the notebook off when it is not in use. Switch off external, connected devices if you are not using them. If you use the energy saving functions, the notebook uses less energy. You will then be able to work for longer before having to recharge the battery.

Energy efficiency is increased and the environmental impact is reduced. You save money while protecting the environment.

## Energy saving under Windows

► Make use of the power management features (see ""Using the power-management features", Page 34").

# Travelling with your notebook

Please observe the points listed below when travelling with your notebook.

## Before you travel

- ► Back up important data stored on your hard disk.
- ► Switch off the wireless component for data security reasons. With data traffic via a wireless connection, it is also possible for unauthorised third parties to receive data.

Information on activating data encryption is provided in the documentation for your wireless component.

- ► If you wish to use your notebook during a flight, first check with the flight attendants if it is OK to do so.

### When travelling in other countries

- ► If you are travelling abroad, check that the mains adapter can be operated with the local mains voltage. If this is not the case, obtain the appropriate mains adapter for your notebook. Do not use any other voltage converter!
- ► Check whether the local mains voltage and the power cable are compatible. If this is not the case, buy a power cable that matches the local conditions.
- ► Contact the relevant authorities of the country you will be travelling in as to whether you may operate the radio component integrated into your notebook computer. Please observe the additional safety instructions for devices with radio components, found in the handbook “Safety/formalities”.

## Notebook: transporting

Protect the notebook from severe shocks and extreme temperatures (e.g. direct sunlight in a car).

- ► If your device has an optical drive, remove all data media (e.g. CD, DVD) from the drives.
- ► Switch the notebook off.
- ► Unplug the mains adapter and all external devices from the power socket.
- ► Disconnect the mains adapter cable and the data cables for all external devices.
- ► Close the LCD screen.
- ► To protect against damaging jolts and bumps, use a notebook carrying case to transport your notebook.

# Cleaning the notebook

Do not clean any interior parts yourself; leave this job to a service technician.

Only use cleaning products designed for computers. Normal household cleaners and polishes can damage the markings on the keyboard and the device, the paintwork or the notebook itself.

Ensure that no liquid enters the notebook.

The LCD screen very sensitive to scratches. Only clean the display surface with a very soft, slightly damp cloth.

► Switch the notebook off.

► In order to prevent accidentially switching the device on, remove the power cable from the mains adaptor and remove the battery (see "Removing and installing the battery", Page 32).

↳ The surface can be cleaned with a dry cloth. If particularly dirty, use a cloth which has been moistened in mild domestic detergent and then carefully wrung out.

You can use disinfectant wipes to clean the keyboard and the touchpad.

Ensure that no liquid enters the device.

# First-time setup of your device

Please read the chapter "Important notes", Page 12.

If your device is equipped with a Windows operating system, the necessary hardware drivers and supplied software are already pre-installed.

Before you switch on the device for the first time, connect it to the mains voltage using the mains adapter, see "Mains adapter connecting", Page 17. The mains adapter must be connected during the entire installation process.

A system test is performed when your device is first switched on. Various messages can appear. The display may remain dark for a short time or may flicker.

Please follow the instructions on the screen.

NEVER switch off your device during the first-time setup process.

When the device is delivered, the battery is located in the battery compartment. The battery must be charged if you want to operate your device using the battery.

When used on the move, the built-in battery provides the device with the necessary power. You can increase the operating time by using the available energy-saving functions.

For instructions on how to connect external devices (e.g. mouse, printer) to your device, please refer to the operating manual for your device.

## Unpacking and checking the device

Should you discover any damage that occurred during transportation, notify your local sales outlet immediately!

- ► Unpack all the individual parts.
- ► Check your device for any visible damage which may have occurred during transportation.

You may need the packaging in the future, if you need to transport your device.

# Selecting a location

Select a suitable location for the device before setting it up. Follow the instructions below when doing so:

- Never place the device or the mains adapter on a heat-sensitive surface. The surface could be damaged as a result.
- Never place the device on a soft surface (e.g. carpeting, upholstered furniture, bed). This can block the air vents and cause overheating and damage.
- The underside of the device heats up during normal operation. Prolonged contact with the skin may become unpleasant or even result in burns.
- Place the device on a stable, flat, non-slippery surface. Please note that the rubber feet of the device may mark certain types of delicate surfaces.
- Keep other objects at least 100 mm / 3.97" away from the device and its mains adapter to ensure adequate ventilation.
- Never cover the ventilation slots of the device.
- Do not expose the device to extreme environmental conditions. Protect the device from dust, humidity, and heat.

# Mains adapter connecting

Observe the safety notes in the enclosed "Safety/Regulations" manual.

The supplied power cable conforms to the requirements of the country in which you purchased your device. Make sure that the power cable is approved for use in the country in which you intend to use it.

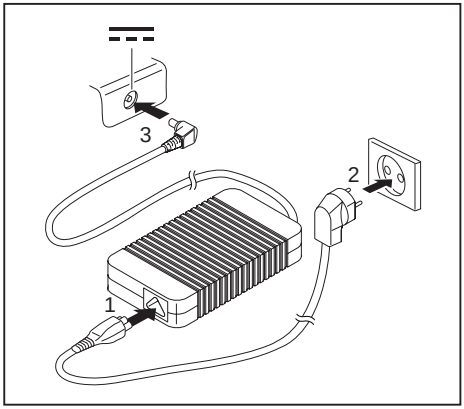


- ► Connect the power cable (1) to the mains adapter.
- ► Plug the mains cable (2) into a mains outlet.
- ► Connect the mains adapter cable (3) to the DC jack (DC IN) of the device.

# Switching on the device for the first time

When you switch on the device for the first time, the supplied software is installed and configured. Because this procedure must not be interrupted, you should set aside enough time for it to be fully completed and connect the device to the mains using the mains adapter.

During the installation process, DO NOT restart the device unless you are requested to do so!

To make it easier to use your device for the first time, the operating system is pre-installed on the hard disk.

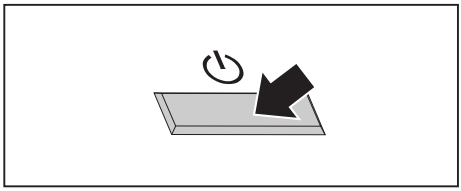

► Switch on your device.

► During installation, follow the instructions on screen.

If a Windows operating system is installed on your device, you will find more information on the system and drivers, help programmes, updates, manuals etc. on the device or on the Internet under "http://www.fujitsu.com/fts/support/".

You can find information and help on the Windows operating system functions on the Internet at "http://windows.microsoft.com".

# Working with the notebook

This chapter describes the basics for operating your notebook. Please read the chapter entitled "Connecting external devices", Page 50 for instructions on how to connect devices such as a mouse and a printer to the notebook.

Please refer to the notes in "Important notes", Page 12.

## Status indicators

The status indicators provide information about the status of the power supply, the drives and the keyboard functions.

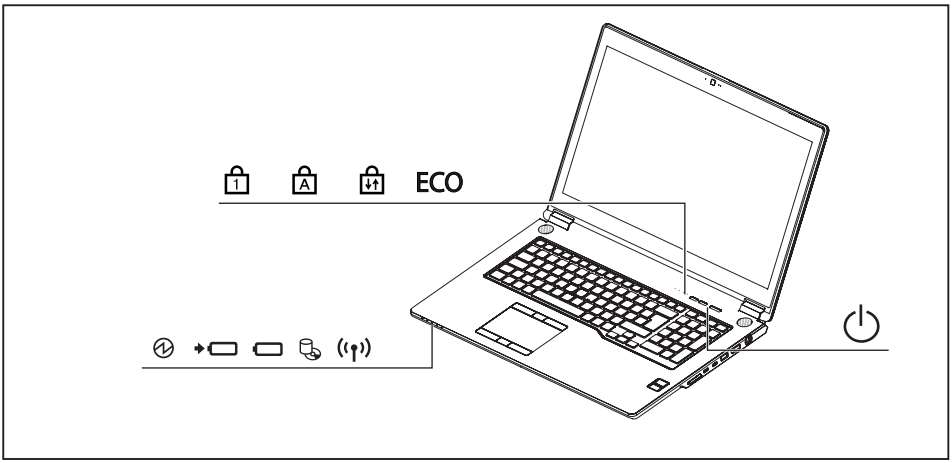

| Indicator | Description |
|---|---|
| | **Power-on indicator/Standby**<br>• Indicator is illuminated: The notebook is switched on.<br>• Indicator flashes: The notebook is in standby mode.<br>• Indicator is off: The notebook is switched off. |
| | **Battery charging indicator/power connector**<br>The state of charge of the battery is shown by the battery indicator.<br>• The indicator lights up in white: The battery is charged.<br>• The indicator lights up orange: the mains adapter is connected and the battery is being charged.<br>• The indicator flashes orange: A fault has occurred.<br>• The indicator is not illuminated: The mains adapter is not connected. |
| | **Battery indicator**<br>• The indicator lights up in white: The battery charge is between 51% and 100% of its maximum.<br>• The indicator lights up in orange: The battery charge is between 13% and 50% of its maximum.<br>• The indicator lights up red: The battery is charged to between 0% and 12% of its maximum capacity.<br>• The indicator is not illuminated: No battery is inserted.<br>• Indicator flashes red: An error has occured. |
| | **Drive indicator**<br>The indicator is illuminated: One of the drives (e.g. hard disk) is being accessed. |
| | **Radio components indicator**<br>• Indicator is illuminated: The wireless components are switched on.<br>• Indicator is off: The wireless components are switched off. |
| | **Num Lock indicator**<br>Indicator is illuminated: The Num key has been pressed. The virtual numerical keypad is activated. You can output the characters indicated on the upper right of the keys. |
| | **Caps Lock indicator**<br>Indicator is illuminated: The Caps Lock key has been pressed. All the characters you type will appear in upper case. In the case of overlay keys, the character printed on the upper left of the key will appear when that key is pressed. |
| | **Scroll Lock indicator**<br>Indicator is illuminated: the key combination Fn + Scr has been pressed. The effect that this key has varies between applications. |
| | **Energy saving functions indicator**<br>• Indicator is illuminated: One of the energy saving functions is activated.<br>• The indicator is not illuminated: The energy saving functions have been deactivated. |

# Switching on the notebook

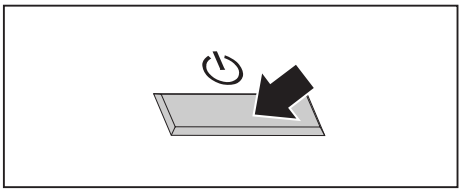

↳ The power-on indicator is lit.

- ► Open the LCD screen.
- ► Press the ON/OFF button for about 1 second to switch the notebook on.

# Notebook: switching off

Back up your data and close all applications before you switch off your device. Otherwise data might be lost.

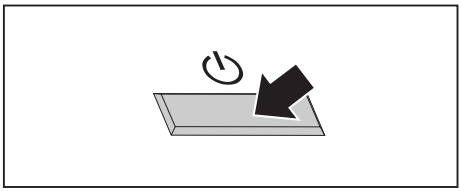

- ► Shut down the operating system correctly.
- ► If the notebook does not switch itself off automatically, press the ON/OFF button for about five seconds.
- ► Close the LCD screen.

# Keyboard

The keyboard of your notebook is subject to continuous wear through normal use. The key markings are especially prone to wear. The key markings are liable to wear away over the life of the notebook.

The keyboard has been designed to provide all the functions of an enhanced keyboard. Some enhanced keyboard functions are mapped with key combinations.

The following description of keys refers to Windows. Additional functions supported by the keys are described in the relevant manuals supplied with your application programs.

The figure below shows how to access the different characters on keys with overlaid functions. The example applies when the Caps Lock key has not been activated.

The illustrations shown below may differ from your actual device.

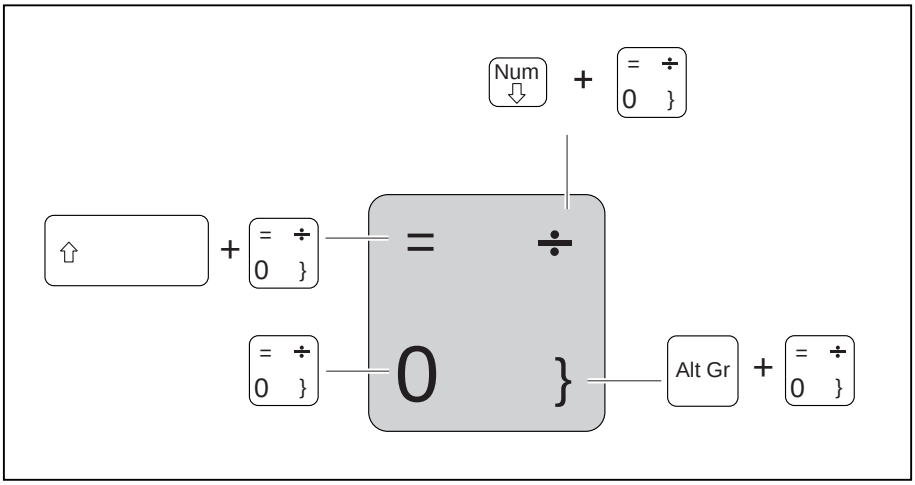

| Key | Description |
|---|---|
| | **Backspace key**<br>The Backspace key deletes the character to the left of the cursor. |
| 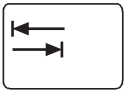 | **Tab key**<br>The Tab key moves the cursor to the next tab stop. |
| | **Enter key (return)**<br>The Enter key terminates a command line. The command you have entered is executed when you press this key. |
| | **Caps Lock key**<br>The Caps Lock key activates the Caps Lock mode, and the corresponding icon is displayed in the Windows information area. In Caps Lock mode, all of the characters you type appear in upper case. In the case of overlay keys, the character printed on the upper left of the key will appear when that key is pressed. To cancel the Caps Lock function, simply press the Caps Lock key again. |
| | **Shift key**<br>The Shift key causes uppercase characters to appear. In the case of overlay keys, the character printed on the upper left of the key appears when that key is pressed. |
| | **Fn key**<br>The Fn key enables the special functions indicated on overlay keys (see "Key combinations", Page 24). |
| 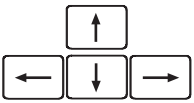 | **Cursor keys**<br>The cursor keys move the cursor in the direction of the arrow, i.e. up, down, left, or right. |
| | **Windows key**<br>The Windows key switches between the start screen and the last used application. |
| | **Menu key**<br>The Menu key opens the menu for the active application. |

## Separate number block

The keyboard of your notebook has a separate number block on the far right.

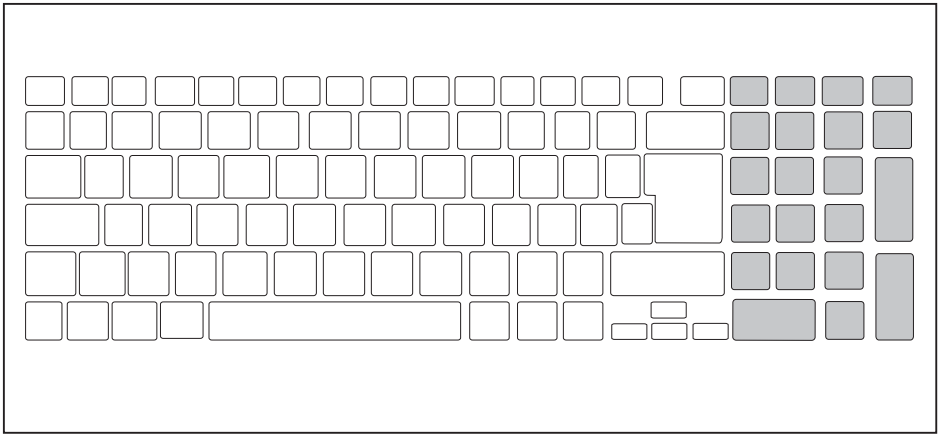

## Key combinations

The following description of key combinations applies to Windows operating systems. Some of the following key combinations may not function in other operating systems or with certain device drivers.

Other key combinations are described in the relevant manuals supplied with your application programs.

Key combinations are entered as follows:

- ► Press the first key in the combination and keep it pressed.
- ► While holding the first key down, press the other key or keys in the combination.

| Combination | Description |
|---|---|
| Fn + F2 | **Activate/deactivate keyboard backlight (optional)**<br>On backlit keyboards, this key combination activates or deactivates the backlight. |
| Fn + F3 | **Switching the loudspeakers on and off**<br>This key combination switches your notebook's loudspeakers off and on. |
| Fn + F4 | **Switching the touchpad and touchpad buttons on/off**<br>This key combination switches the touchpad and the touchpad buttons on or off. |

| Combination | Description |
|---|---|
| Fn + F6 | **Decrease screen brightness**<br>This key combination decreases the brightness of the screen. |
| Fn + F7 | **Increase screen brightness**<br>This key combination increases the brightness of the screen. |
| Fn + F8 | **Decrease volume**<br>This key combination reduces the volume of the internal loudspeakers. |
| Fn + F9 | **Increase volume**<br>This key combination increases the volume of the internal loudspeakers. |
| Fn + F10 | **Toggle output screen**<br>Use this key combination to select which screen(s) is/are used for display if an external monitor is connected.<br>Screen output is possible:<br>• only on the notebook's LCD screen<br>• on the LCD screen of the notebook and the external monitor at the same time<br>• only on the external monitor<br>This setting is useful if you would like a high resolution and a high refresh rate on an external monitor. |
| Alt + ⇤⇥ | **Switch between open applications**<br>Use this key combination to switch between several open applications. |
| Ctrl + Alt + Del | **Windows security/Task-Manager**<br>This key combination opens the Windows security/Task-Manager window. |
| ⇧ + ⇤⇥ | **Back tab**<br>This key combination moves the cursor back to the previous tab stop. |

Key combinations using the Windows keys are detailed in the manual for your operating system.

## Country and keyboard settings

► Change the country and keyboard settings as described in the documentation for your operating system.

# Application keys

Your notebook is equipped with two application buttons.

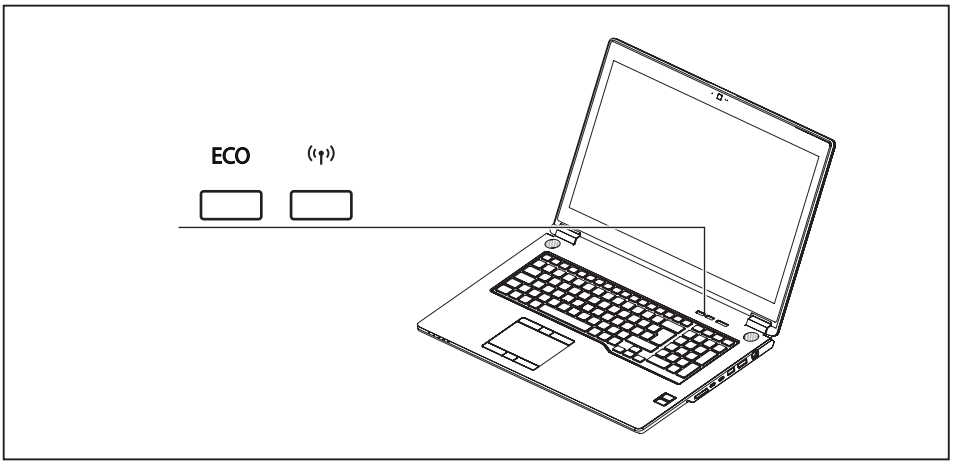


| Button | Description |
|---|---|
| ECO | **Eco button (E key)**<br>The E button is a convenient way of activating and deactivating energy saving functions (e.g. reduce screen brightness), see also "Using the power-management features", Page 34. |
| (wireless) | **Wireless Components key**<br>This application key is used to start the *WirelessSelector* software. The wireless components that have been activated in the *BIOS Setup* can be switched on and off individually. |

# Touchpad and touchpad buttons

Keep the touchpad clean. Protect it from dirt, liquids and grease.

Do not use the touchpad if your fingers are dirty.

Do not rest heavy objects on the touchpad or the touchpad buttons.

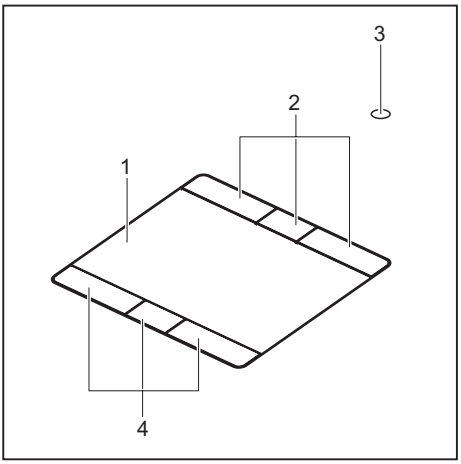


1 = Touchpad
2 = TouchStick buttons
3 = TouchStick (optional)
4 = Touchpad buttons

The touchpad enables you to move the pointer on the screen.

The touchpad buttons allow you to select and execute commands. They correspond to the buttons on a conventional mouse.

You can also disable the touchpad via a key combination, to prevent you from moving the pointer on the screen unintentionally (see chapter "Key combinations", Page 24).

## Moving the pointer

► Move your finger on the touchpad.

**or**

► Press down gently with your finger on the TouchStick. If you want to move the pointer to the left for example, press down gently on the left side of the TouchStick.

↳ The pointer will move.

## Selecting an item

► Move the pointer to the item you wish to select.

► Tap the touchpad once or press the left-hand TouchStick/touchpad button once.

↳ The item is selected.

## Executing commands

► Move the pointer to the field you wish to select.
► Tap the touchpad twice or press the left TouchStick/touchpad button twice.
↳ The command is executed.

## Dragging items

► Move the pointer to the item you wish to select.
► Select the desired object and hold down the left TouchStick/touchpad button.
► Drag the object to the desired position.
► Lift your finger from the touchpad.

**or**

► Lift your finger from the TouchStick.
↳ The item will be moved.

# LCD screen

High-quality LCD screens (TFT) are installed in Fujitsu notebooks. For technical reasons, these screens are manufactured for a particular resolution. An optimum and sharp image can only be ensured with the resolution intended for the particular screen. A screen resolution which differs from the specification can result in an unclear image.

The resolution of your notebook's screen is set to the optimum at the factory.

With the present standards of production technology, absolutely flawless screen images cannot be guaranteed. There may be a few constantly light or dark pixels (picture elements) on the screen. The maximum permitted number of such faulty pixels is specified in the international standard ISO 9241-307 (Class II).

**Example:**

A screen with an HD resolution of 1366 x 768 has 1366 x 768 = 1049088 pixels. Each pixel consists of three subpixels (red, green and blue), making a total of about 3 million subpixels. According to ISO 9241-307 (class II), a maximum of 2 light and 2 dark pixels and in addition 5 light or 10 dark subpixels or an equivalent mix (1 light subpixel counts as 2 dark subpixels) are allowed to be defective.

| | |
|---|---|
| Pixel | A pixel consists of 3 subpixels, normally red, green and blue. A pixel is the smallest element that can be generated by complete functionality of the display. |
| Subpixel | A subpixel is a separately addressable internal structure within a pixel that enhances the pixel function. |
| Cluster | A cluster contains two or more defective pixels or subpixels in a 5 x 5 pixel block. |

### Background lighting

LCD screens are operated with background lighting. The luminosity of the background lighting can decrease during the period of use of the notebook. However, you can set the brightness of your screen individually.

### Synchronising the display on the LCD screen and an external monitor

For more information, please refer to the chapter "Key combinations", Page 24 under "Toggle output screen".

# Webcam

Depending on the software used, you can use your Webcam to take pictures, record video clips or take part in web chats.

The WebCam has its own status indicator. The indicator lights up when the WebCam is switched on.

- The picture quality depends on the lighting conditions and the software being used.
- You can only operate the webcam with a particular application (e.g. an Internet telephony program or a video conferencing program which supports a webcam).
- When using the webcam the notebook support must not wobble.
- The webcam automatically adjusts itself to the current light level. For this reason the LCD screen may flicker while the light level is adjusted.

Further information on using the webcam and on the additional settings which are possible for your webcam can be found in the help function of the program which uses the webcam.

# Rechargeable battery

When not plugged into a mains socket, the notebook runs on its built-in battery. You can increase the life of the battery by caring for the battery properly. The average battery life is around 500 charge/discharge cycles.

You can extend the battery life by taking advantage of the available energy saving functions.

## Charging, caring for and maintaining the battery

The notebook battery can only be charged when the ambient temperature is between 5°C / 41°F and max. 35°C / 95°F.

You can charge the battery by connecting the notebook to the mains adapter (see "Mains adapter connecting", Page 17).

Please note that the battery will not be charged if the battery status is between 90% and 100%. If the battery status is less than 90% and the mains adapter is connected, the battery will be charged to 100%.

If the battery status is low, you will hear a warning alarm. If you do not connect the mains adapter within approximately five minutes of the warning alarm described above, your notebook will switch off automatically.

**monitoring the battery charging level**

Windows also has a "Battery status meter" in the taskbar for monitoring the battery capacity. When you place the mouse pointer on the battery symbol, the system displays the battery status.

**Battery storage**

Store battery packs in a dry environment at a temperature between 0°C / 32°F and 30°C / 86°F. The lower the temperature at which the batteries are stored, the lower the rate of self-discharge.

If you will be storing batteries for a longer period (more than two months), the battery charge level should be approx. 30 %. To prevent exhaustive discharge which would permanently damage the battery, check the level of charge of the battery at regular intervals.

To be able to make use of the optimal charging capacity of the batteries, the battery should be completely discharged and then fully recharged.

If you do not intend to use a battery for long periods of time, remove it from the notebook. Never store a battery in the device.

# Removing and installing the battery

Only use batteries approved by Fujitsu for your notebook.

Never use force when fitting or removing a battery.

Make sure that no foreign bodies get into the battery connections.

Never store a battery for long periods in the discharged state. This can make it impossible to recharge.

## Removing a battery

► Prepare for removal, see chapter "Preparing to remove components", Page 58.

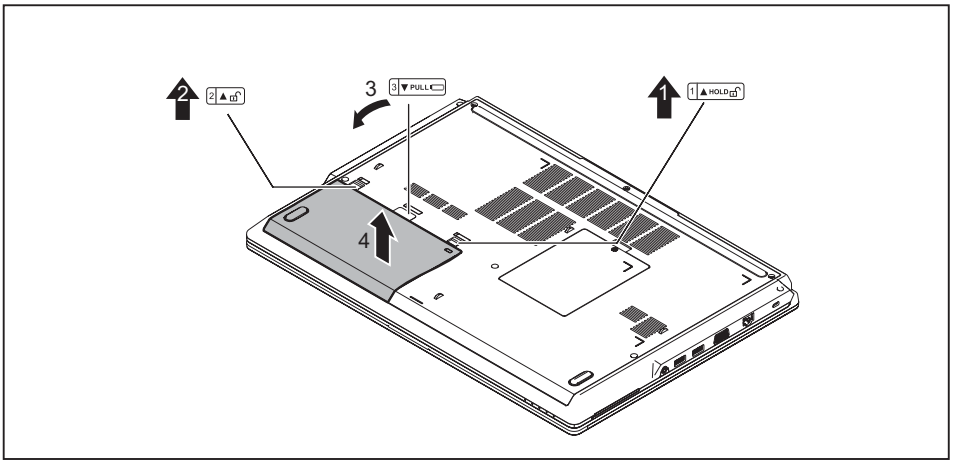


► Slide battery release 1 in the direction of the arrow (1) and hold it in place.
► Push release mechanism 2 in the direction of the arrow (2).
► Reach into the opening (3) and remove the battery from the battery compartment.

## Installing a battery

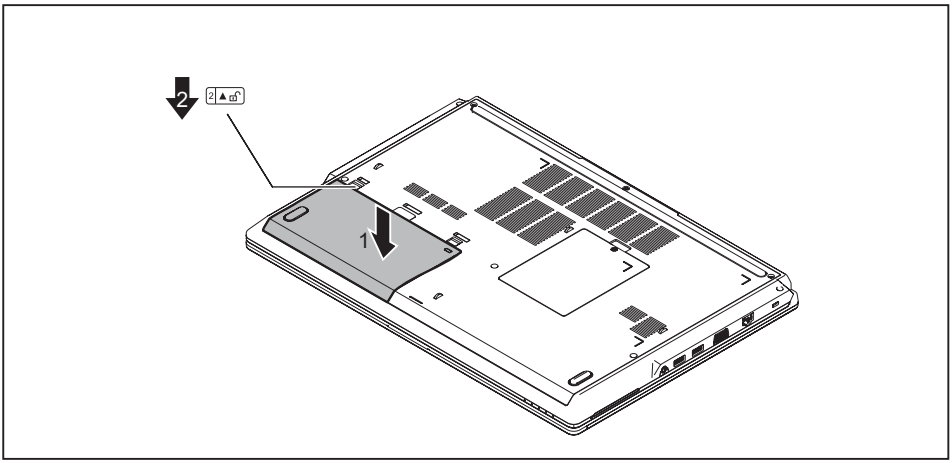


- ► Insert the battery in the battery compartment (1).
- ► Slide the battery release in the direction of the arrow (2).
- ► Complete the insertion process, see chapter "Finishing component removal", Page 67.

# Using the power-management features

The notebook uses less power when the available power-management features are used. You will then be able to work longer when using the battery before having to recharge it.

Power efficiency is increased and environmental pollution reduced. By choosing the best power options, you can make significant savings and at the same time help protect the environment.

When you close the LCD screen, depending on the setting in Windows, the notebook automatically enters a power saving mode.

The recommended settings for the Windows energy saving functions are predefined as "Fujitsu Computer EcoSettings" in the Power Options of the Control Panel and can be displayed there.

► Select the power management functions in your Control Panel.

If you need further information about an option, you can get help with most settings by pressing F1 to open the Microsoft Help.

**When the notebook is in power-saving mode, the following must be remembered:**

During power saving mode, open files are held in the main memory or in a swap file on the hard disk.

Never turn off your notebook while it is in a power saving mode. If the built-in battery is nearly empty, close the open files and do not go into power saving mode.

**If you do not intend to use your notebook for a long period of time:**

► Exit power saving mode if necessary via the mouse or keyboard or by switching on the notebook.
► Close all opened programs and completely shut down the notebook.

## Adjusting fan control

You can adjust the fan control in the BIOS Setup Utility. The following settings are available:

- Normal: The system is cooled to ensure that the maximum system performance is always available.
- Silent: The fan rotation speed, and therefore the noise created by the fan, is reduced.

► Call up the *BIOS Setup Utility*.
► In the menu *Advanced - Miscellaneous Configurations* select the *Fan Control* function.
► Choose the setting *Normal* or *Silent*.

Instructions for how to call up and operate the *BIOS-Setup-Utility* can be found in chapter "Settings in BIOS Setup Utility", Page 68.

# Memory cards

Your notebook is equipped with an integrated memory card reader.

Observe the manufacturer's instructions when handling the memory cards.

## Supported formats

Your notebook supports the following format:

- Secure Digital (SD™ card)

## Inserting the memory card

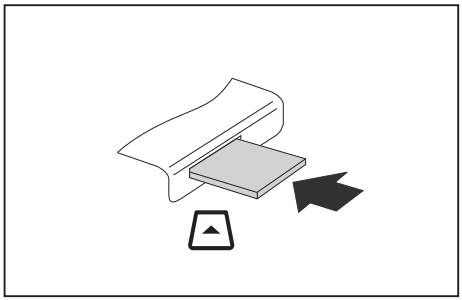

► Carefully push the memory card into the slot until you feel it click into place. The label should be facing upward. Do not apply excessive force, as otherwise the delicate contact surfaces could be damaged.

↳ Depending on the particular type used, the memory card may protrude slightly from the slot.

## Removing the memory card

In order to protect your data, always follow the correct procedure for removing the card (see the documentation for your operating system).

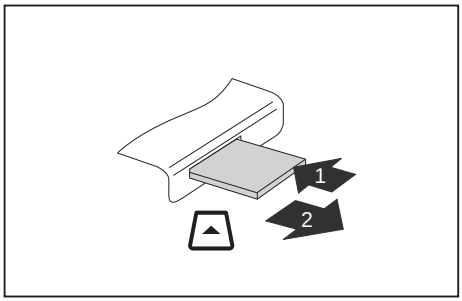


► On devices with card locking: Press on the memory card (1).

↳ The memory card is released and can now be removed.

► Pull the memory card out of the slot (2).

# Loudspeakers and microphones

You will find information about the exact position of speakers and microphones in chapter "Ports and controls", Page 9.

Please refer to chapter "Key combinations", Page 24 for information on setting the volume and also enabling/disabling the loudspeakers using key combinations.

If you attach an external microphone, the built-in microphone is disabled.

When you connect headphones or external speakers, the built-in speakers are disabled.

Information on connecting headphones and a microphone can be found in "Connecting external devices", Page 50.

# SIM card

A SIM Card (Subscriber Identity Module) is a chip card which is inserted in a mobile telephone or notebook to enable access to a mobile radio network in conjunction with an installed UMTS module.

Follow the instructions supplied by the provider of the SIM card.

The SIM card slot is located in the battery compartment and can only be accessed when the battery is removed.

## Inserting the SIM card

The device support cards in micro-SIM format (15 mm x 12 mm).

- ► Prepare for installation of the SIM card, see chapter "Preparing to remove components", Page 58.
- ► Remove the battery, see "Removing a battery", Page 32.

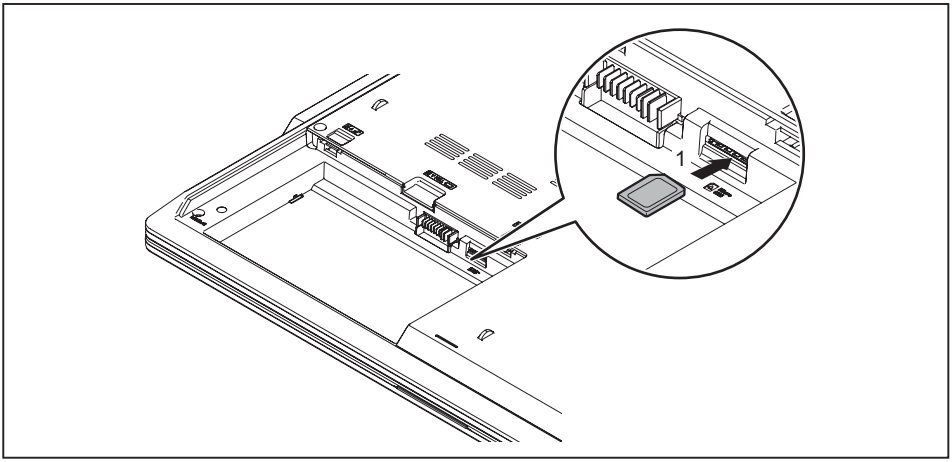


- ► Slide the SIM card into the slot (1) until you hear it engage, as shown in the diagrams on the battery compartment.
- ► Install the battery again, see "Installing a battery", Page 33.
- ► Complete the installation, see chapter "Finishing component removal", Page 67.

# Removing the SIM card

► Prepare for removal of the SIM card, see chapter "Preparing to remove components", Page 58.
► Remove the battery, see "Removing a battery", Page 32.

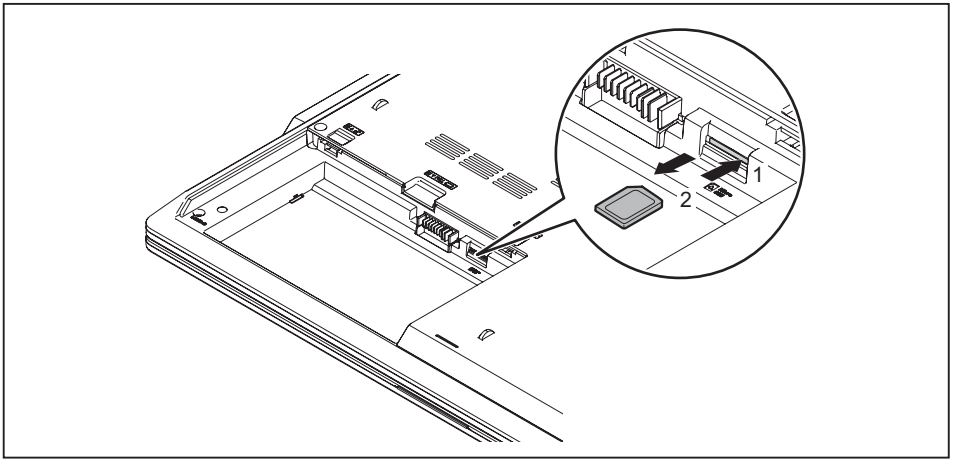


► Press on the edge of the SIM card (1) so that it pops up slightly out of the slot.
► Pull the SIM card out of its slot in the direction of the arrow (2).
► Install the battery again, see "Installing a battery", Page 33.
► Complete the removal, see chapter "Finishing component removal", Page 67.

# Wireless components LAN / Bluetooth / LTE (optional)

The installation of radio components not approved by Fujitsu will invalidate the certifications issued for this device.

## Switching the wireless components on and off

► Press the button to start the *WirelessSelector*.

↳ The wireless component indicator will be illuminated when one or more wireless components is switched on.

If you disconnect the wireless components, the wireless LAN antennae and the Bluetooth and LTE modules are disconnected.

You can enable and disable the installed wireless components individually using the *WirelessSelector* programme

Pay attention to the additional safety notes for devices with wireless components provided in the "Safety/Regulations" manual.

Details on using Wireless LAN can be found in the online help system included in the Wireless LAN software.

You can find more information on how to use Bluetooth on the CD you received with your Bluetooth software.

For further information about LTE, please contact your service provider.

## Setting up WLAN access

- Requirement: A WLAN must be available and you must have the corresponding access information.

Information on configuring the WLAN access can be found in the documentation for your operating system.

## Access via LTE (optional)

If you ordered an integrated LTE module with your system, you can enjoy optimum reception and maximum energy efficiency without awkward cables or antennas. The optional LTE module is ready for use straight away.

You will find information on establishing the connection with the LTE network in the documentation for the hardware you plan to use.

Your device can connect with the Internet via LTE. To do this, use one of the following types of connection:

- Integrated LTE module (depending on your model variant)
- a USB dongle (a USB stick with your mobile phone provider’s SIM card)
- a mobile end-device (e.g. mobile phone with Bluetooth or cable connection)

# Ethernet and LAN

The internal network module of your notebook supports Ethernet LAN. You can use it to establish a connection to a local network (LAN = Local Area Network).

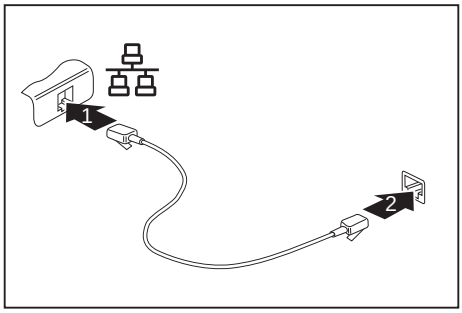


- ► Connect the network cable to the LAN port of the notebook (1).
- ► Connect the network cable to your network connection (2).

Your network administrator can help you to configure and use the LAN connections.

The network cable is not included in the delivery scope. This type of cable can be obtained from a specialist dealer.

# Your Port Replicator

The Port Replicator is a device that helps you to quickly connect your notebook to your peripheral devices, such as a monitor, printer etc.

The features offered by the Port Replicator include standard ports for monitor, audio, mouse and keyboard.

You need only dock the notebook in order to work with your peripheral devices.

## Ports on the Port Replicator

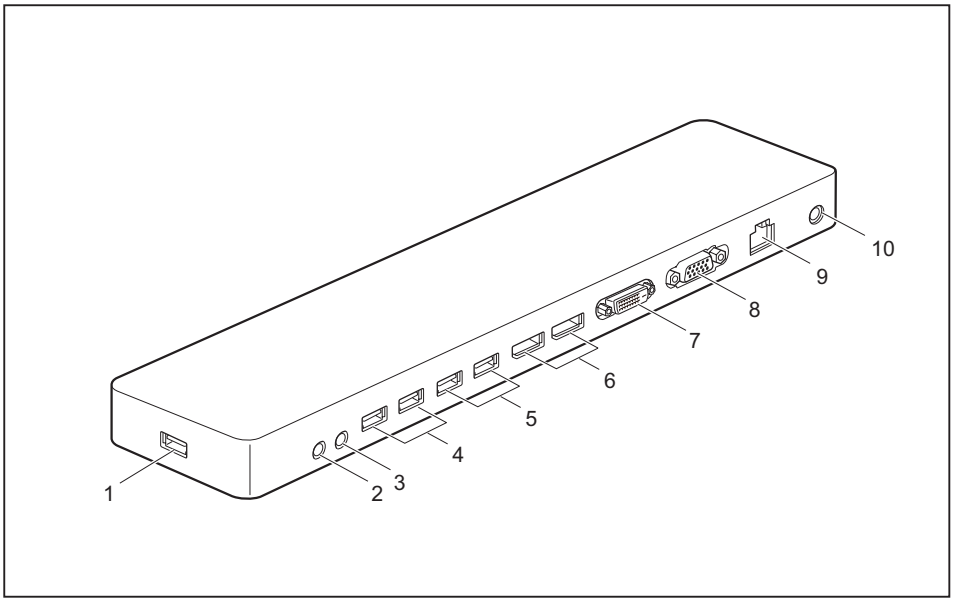


1 = USB 3.1 port providing data connection for the notebook (USB Type-C™)
2 = Microphone port
3 = Headphone jack
4 = USB 2.0 connections
5 = USB 3.0 connections
6 = DisplayPort
7 = DVI-D screen connection
8 = VGA monitor port
9 = LAN port
10 = DC input connector (DC IN)

Both screen connections can be used simultaneously.

## Setting up the port replicator

Select a suitable location for the Port Replicator before setting it up. Follow the instructions below when doing so:

- Never place the port replicator on a soft surface (e.g. carpeting, upholstered furniture, bed). This can block the air vents of the notebook and cause overheating and damage.
- Place the port replicator on a stable, flat and non-slip surface. Please note that the port replicator's rubber feet may mark certain types of surface.
- Never place the port replicator and the mains adapter on a heat-sensitive surface.
- Do not expose the port replicator to extreme environmental conditions.
  Protect the port replicator from dust, humidity and heat.

## Connecting the mains adapter to the Port Replicator

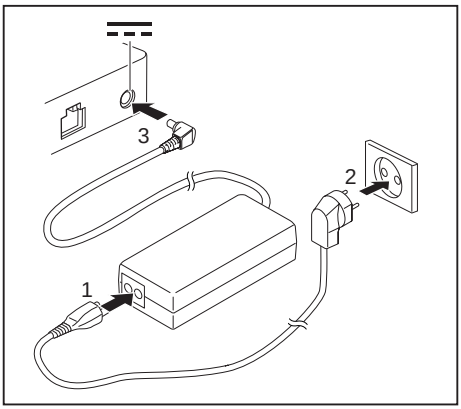


- ► Connect the power cable to the mains adapter (1).
- ► Plug the power cable into the mains socket (2).
- ► Connect the mains adapter cable to the DC jack (DC IN) of the Port Replicator (3).

When the notebook is connected to a Port Replicator, the operating system creates a hardware profile for the "Docked" mode. In this profile, for example, the setting is saved as to which monitor was last used for output. This profile will be loaded, as soon as the notebook is connected to a Port Replicator of the same type.

## Connect the notebook to the port replicator

The port replicator does not supply the Notebook computer **with** power. The notebook computer must be connected to power using its own mains adaptor, or it must be sufficiently charged.

If the notebook computer is connected to the port replicator and it is running on battery power, you may feel a slight tingling when you touch the top of the aluminium housing. This effect is harmless. The device meets all relevant safety standards.

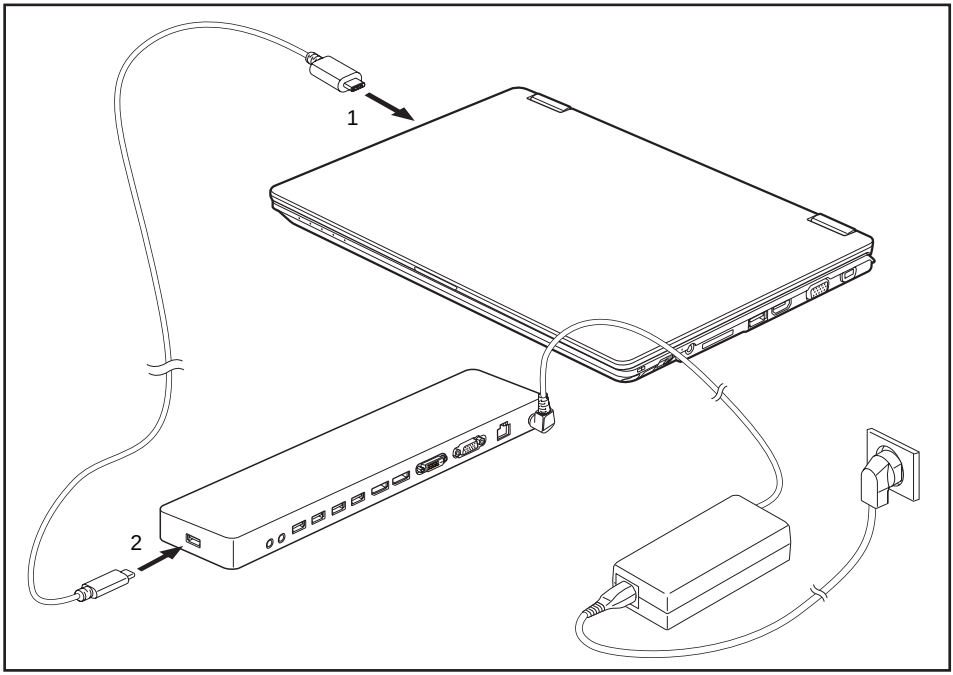


- ► Connect one end of the USB cable (USB Type-C™) to the USB 3.0 port (USB Type-C™) on the notebook computer (1).
- ► Connect the other end of the USB cable (USB Type-C™) to the USB 3.0 port to provide a data connection (USB Type-C™) on the port replicator (2).

## Disconnecting the notebook from the Port Replicator

- ► Disconnect the supplied USB cable (USB Type-C™) from the USB port 3.0 (USB Type-C™) of the notebook.

# Security functions

Your notebook has several security features that you can use to secure your system from unauthorised access.

This chapter explains how to use each function, and what the benefits are.

Please remember that in some cases, for example, forgetting your password, you may be locked out and unable to access your data. Therefore, please note the following information:

- Make regular backups to external data carriers such as external hard drives, CDs, DVDs or Blu-ray Discs.
- Some security functions need you to choose passwords. Make a note of the passwords and keep them in a safe place.

If you forget your passwords you will need to contact the our Service Desk. Deletion or resetting of passwords is not covered by your warranty and a charge will be made for assistance.

## Configuring the fingerprint sensor

Whether or not your device has a fingerprint sensor depends on the device configuration you have ordered.

The fingerprint sensor can record an image of a fingerprint. With additional fingerprint software, this image can be processed and used instead of a password.

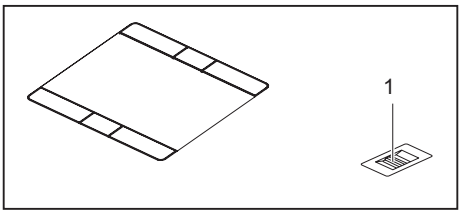


► You must install the fingerprint software in order to be able to use the fingerprint sensor (1).

The current *Workplace Protect* software for palm vein and fingerprint sensors can be found on the Internet at "http://www.fujitsu.com/fts/solutions/business-technology/security/secure/index.html".

# Using the Security Lock

Your device comes with a Security Lock mechanism for the Kensington Lock Cable. You can use the Kensington Lock Cable, a sturdy steel cable, to help protect your notebook from theft. The Kensington Lock Cable is available as an accessory.

Fujitsu recommends the use of a combination lock.

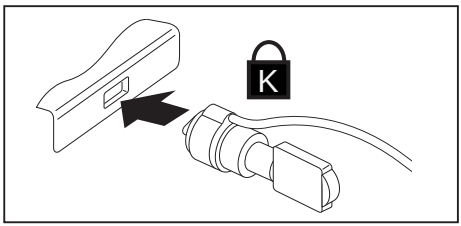


► Fit the Kensington Lock Cable to the mechanism on your notebook.

Attach another Kensington Lock Cable to your Port Replicator to protect your Port Replicator from theft as well.

# Configuring password protection in BIOS Setup Utility

Before using the various options for password protection in the *BIOS Setup utility* to increase data security, please observe the following:

Make a note of the passwords and keep them in a safe place. If you forget your supervisor password you will not be able to access your notebook. Deletion of the password is not covered by your warranty and a charge will be made for assistance.

Your password can be up to eight characters long and contain letters and numbers. No distinction is made between uppercase and lowercase.

# Protecting BIOS Setup Utility (supervisor and user password)

If you have opened these operating instructions on the screen, we recommend that you print them out. You cannot call the instructions onto the screen while you are setting up the password.

The supervisor password and the user password both prevent unauthorised use of the *BIOS Setup Utility*. With the aid of the supervisor password you can access all of the functions of the *BIOS Setup Utility*, while the user password will only give you access to some of the functions. You can only set up a user password if a supervisor password has already been assigned.

Please refer to section "Settings in BIOS Setup Utility", Page 68 for a description of how to call up and operate the *BIOS-Setup-Utility*.

## Assigning the supervisor and user passwords

- ► Start the *BIOS Setup Utility* and go to the *Security* menu.
- ► Select the *Set Supervisor Password* field and press the Enter key.
- ↳ With *Enter new Password*: you are asked to enter a password.
- ► Enter the password and press the Enter key.
- ↳ *Confirm new Password* requires you to confirm the password.
- ► Enter the password again and press the Enter key.
- ↳ *Changes have been saved* is a confirmation that the new password has been saved.
- ► To set the user password, select *Set User Password* and proceed exactly as when configuring the supervisor password.
- ↳ If you do not want to change any other settings, you can exit *BIOS Setup Utility*.
- ► In the *Exit* menu, select the option *Save Changes & Exit*.
- ► Select *Yes* and press the Enter key.
- ↳ The notebook is then rebooted and the new password comes into effect. It will now be necessary to first enter your supervisor or user password in order to open the *BIOS Setup Utility*. Please note that the user password only provides access to a few of the BIOS settings.

## Changing the supervisor or user password

You can only change the supervisor password when you have logged into the *BIOS Setup Utility* with the supervisor password.

- ► Call the *BIOS Setup Utility* and go to the *Security* menu.
- ► When changing the password, proceed exactly as for password assignment.

### Removing passwords

To remove a password (without setting a new password) perform the following steps:

► Start the *BIOS Setup Utility* and go to the *Security* menu.
► Highlight the *Set Supervisor Password* or *Set User Password* field and press the Enter key.
↳ You will be requested to enter the current password by the *Enter Current Password* prompt.
You will be requested to enter a new password by the *Enter New Password* prompt.
► Press the Enter key twice.
► In the *Exit* menu, select the option *Save Changes & Exit*.
► Select *Yes* and press the Enter key.
↳ The notebook will now reboot with the password removed.
Removing the supervisor password simultaneously deactivates the user password.

## Password protection for booting of the operating system

With the supervisor password you have set in the *BIOS Setup Utility* (see section "Assigning the supervisor and user passwords", Page 46), you can also prevent starting of the operating system.

### Activating system protection

► Start the *BIOS Setup Utility* and go to the *Security* menu.
► Select the *Password on Boot* option and press the Enter key.
► Select the desired option (*Disabled*, *First Boot* or *Every Boot*) and press the Enter key
► Select the *Save Changes & Exit* option under *Exit*.
↳ The notebook reboots. You will be prompted to enter your password (the supervisor password).

### Deactivating system protection

► Start the *BIOS Setup Utility* and go to the *Security* menu.
► Select the *Password on Boot* option and press the Enter key.
► Select the *Disabled* option and press the Enter key.
↳ If you do not want to change any other settings, you can exit *BIOS Setup Utility*.
► Select the *Save Changes & Exit* option under *Exit*.
↳ The notebook will reboot. The system is no longer password-protected.

## Password protection for the hard disk

If a supervisor password has been assigned, a password for the hard disk can also be set in the *Hard Disk Security* menu.

The hard disk is protected by this password. Data on this hard disk can only be read into another system if the correct password has been entered.

# Trusted Platform Module - TPM

To use the TPM, you **must** activate the TPM in the *BIOS Setup* before the software is installed. The condition for this is that you have assigned at least the supervisor password (see "Security functions", Page 44).

## Enabling TPM

- Requirement: You have set a supervisor password, see "Security functions", Page 44.

► Call up the BIOS Setup and select the *Security* menu.

► Mark the *TPM Security Chip Setting* field and press the Enter key.

► Select *Enabled* to activate the TPM.

↳ Once you have activated the TPM the *Clear Security Chip* option appears.

Select *Clear Security Chip* to delete the holder in the TPM. By clicking on *Enabled*, all secret keys (e.g. SRK - Storage Root Keys, AIK - Attestation Identity Keys etc.) generated by applications are deleted.

Please note that you will then no longer be able to access the data you have encrypted with the keys based on that holder.

► From the *Exit* menu, choose the option *Exit Saving Changes*.

► Press the Enter key and select *Yes*.

↳ The notebook will restart, and TPM will be enabled after the reboot.

## Disabling TPM

- Requirement: You have set a supervisor password, see "Security functions", Page 44.

► Call up the BIOS Setup and select the *Security* menu.

► Mark the *TPM Security Chip Setting* field and press the Enter key.

► Select *Disabled* to deactivate the TPM.

► From the *Exit* menu, choose the option *Exit Saving Changes*.

► Press the Enter key and select *Yes*.

↳ Your notebook will now restart and TPM will be disabled.

# SmartCard reader

SmartCards are not supplied as standard equipment. You can use all SmartCards that comply with the ISO standard 7816-1, -2 or -3. These SmartCards are available from various manufacturers.

With the appropriate software you can use your SmartCard as an alternative to password protection, but also as a digital signature, for encrypting your e-mails or for home banking.

We recommend that you always use two SmartCards. Always keep one of the SmartCards in a safe place if you are carrying the other SmartCard with you.

In order to be able to take advantage of all the security features of your notebook, you will need a CardOS SmartCard from Fujitsu.

The SmartCard can only be used with a PIN, offering maximum protection even if you lose the SmartCard. In order to maximise your security, the CardOS SmartCard is disabled if three incorrect attempts are made to enter the PIN.

When you use the CardOS SmartCard for the first time, you will either need to enter the preset PIN "12345678" or the PIN given to you by your systems administrator.

## Inserting the SmartCard

Do not use force when inserting and removing the SmartCard.

Make sure that foreign objects do not fall into the SmartCard reader.

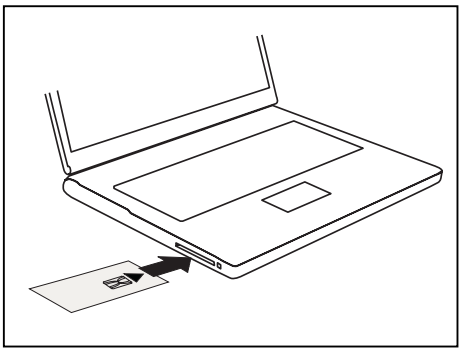

► Slide the SmartCard into the SmartCard reader with the chip facing upwards (on some variants it faces down) and to the front.

# Connecting external devices

Always refer to the safety information provided in "Important notes", Page 12 before connecting or disconnecting any devices to or from your notebook.

Always read the documentation supplied with the device you wish to connect.

Never connect or disconnect cables during a thunderstorm.

Never pull at a cable when disconnecting it. Always grasp the plug.

With some devices such as USB devices, it is not necessary to switch off the notebook and the device before connecting/disconnecting. For more information about whether or not devices need to be switched off, please refer to the documentation supplied with the external device.

Some of the external devices require special drivers (see the operating system and external device documentation).

# Connecting an external monitor

An analogue monitor is connected to the analogue VGA monitor port, a digital monitor to the Displayport or the DVI-D monitor port on the optional Port Replicator. Screen output is limited to a maximum of two screens at any one time (see "Key combinations", Page 24, section "Toggle output screen").

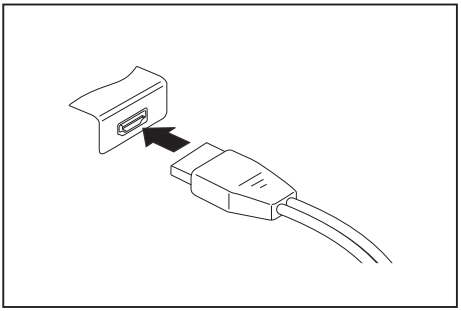

Digital Displayport (on notebook or on optional Port Replicator)

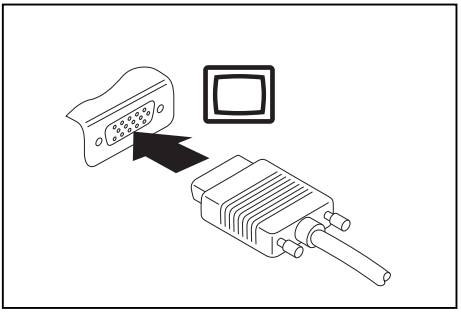

Analogue VGA monitor port (on notebook or on optional port replicator)

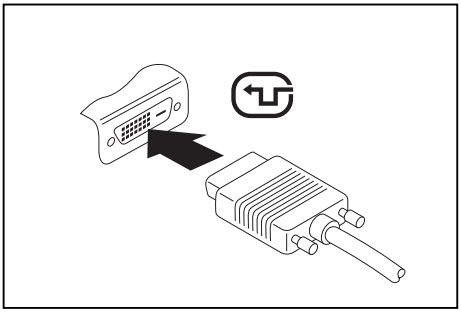

Digital DVI-D monitor port (on the optional Port Replicator)

- ► Switch off the notebook and the external monitor.
- ► Plug the data cable of the external monitor into the monitor port.
- ► First switch on the external monitor and then the notebook.

You can also switch between the external monitor and the LCD monitor of the notebook, see chapter "Key combinations", Page 24.

You can display the same picture on the external monitor and the notebook LCD monitor simultaneously.

If you wish to operate the monitor via a DVI port, use the optional Port Replicator available for your notebook.

# Connecting USB devices

On the USB ports, you can connect external devices that also have a USB port (e.g. a DVD drive, a printer, a scanner or a modem).

USB devices are hot-pluggable. This means you can connect and disconnect devices while your operating system is running.

USB 1.x has a maximum data transfer rate of 12 Mbit/s.

USB 2.0 has a data transfer rate of up to 480 Mbit/s.

USB 3.0 has a data transfer rate of up to 5 Gbit/s.

USB 3.1 has a data transfer rate of up to 10 Gbit/s.

Additional information can be found in the documentation for the USB devices.

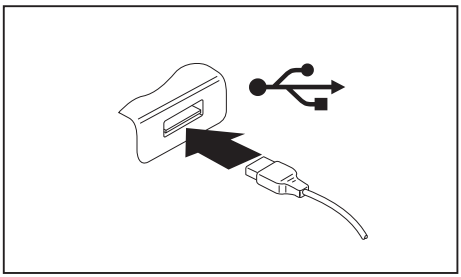

- ► Connect the data cable to the external device.
- ► Connect the data cable to a USB port of the notebook.

**Device drivers**

USB devices will be automatically recognised and installed by your operating system.

## USB connection with charging function (USB Type-C™)

At this USB port, you can charge a connected USB device or operate devices without an additional power supply (e.g. a monitor or printer).

USB devices are hot-pluggable. This means you can connect and disconnect the cables of USB devices while the system is running.

Additional information can be found in the documentation for the USB devices.

Please note that the USB Type-C™ type of port offers a maximum power output of 5 V / 3 A.

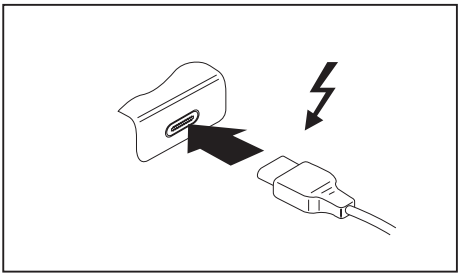

- ► Connect the data cable to the external device.
- ► Connect the data cable to a USB port (USB Type-C™) of the notebook.

## USB port with charging function (Anytime USB charge)

You can use this USB port to charge or supply power to a connected USB device (e.g. to charge a PDA or a mobile phone or to connect a USB lamp).

Charging is also possible when the notebook is switched off, if the *Anytime USB Charge* function is activated in the *Advanced* menu of the *BIOS Setup Utility*. If the setting *AC* is selected, the device will only be charged when the mains adapter is connected.

Please refer to section "Settings in BIOS Setup Utility", Page 68 for a description of how to call up and operate the *BIOS-Setup-Utility*.

It is recommended that the notebook be operated with the power supply connected whenever the USB port with charging function is in use, as this function will drain the battery more quickly if an external USB device is being charged.

The power supply unit must already be connected when the notebook is switched off, as otherwise the USB charging function will be disabled and the connected USB devices will not be charged.

Some USB devices (e.g. mobile telephones) require a driver in order to utilise the USB charging function. In this case the USB charging function will not work when the notebook is switched off, as no drivers are active when the notebook is switched off.

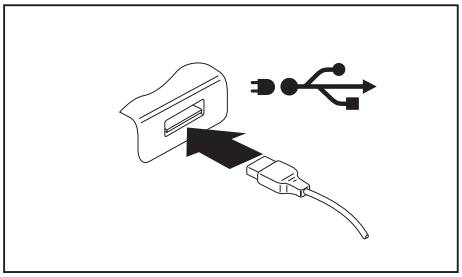

- ► Connect the data cable to the external device.
- ► Connect the data cable to a USB port (Anytime USB charge) of the notebook.

## How to remove USB devices correctly

Always correctly remove the device according to the rules described below, to ensure that none of your data is lost.

- ► Left click on the icon to safely remove hardware, located in the taskbar.
- ► Select the device which you want to shut down and remove.
- ► Press the Enter key.
- ↳ Wait for the dialogue box which tells you that it is now safe to remove the device.

# Connecting external audio devices

## Headset port

You can connect a headset, headphones or external loudspeakers to your notebook via the headset port.

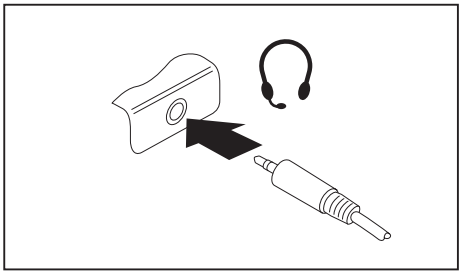

- ► Connect the audio cable to the external device.
- ► Connect the audio cable to the headset port of the notebook.
- ↳ The internal loudspeakers are disabled.

i

If you buy a cable from a retailer, please note the following information:

The headset port on your notebook is a "3.5 mm jack socket".

If you want to connect a headset, headphones or loudspeakers, you will need a "3.5 mm jack plug".

## Microphone port (on the optional port replicator)

Using the microphone connection on the optional port replicator, you can connect an external microphone, a MiniDisc player, MP3 player, CD player or a tape deck to your notebook computer.

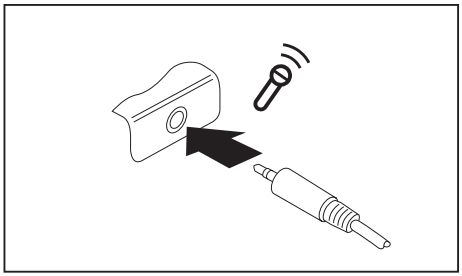

- ► Connect the audio cable to the external device.
- ► Connect the audio cable to the microphone port of the port replicator.

# Headphone jack (on the optional port replicator)

You can use the headphone jack of the optional port replicator, you can connect either a set of headphones or external speakers to your notebook computer.

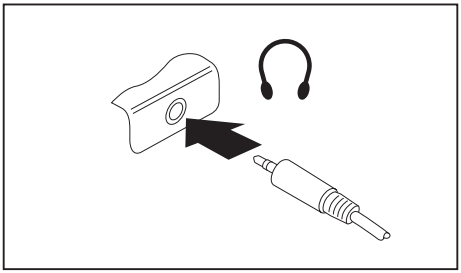

- ► Connect the audio cable to the external device.
- ► Connect the audio cable to the headphone jack of the port replicator.

If you purchase a cable from a retailer, please note the following information:

The headphone jack is a "3.5 mm jack socket".

If you want to connect headphones or a speaker you will need a "3.5 mm jack plug".

# Removing and installing components during servicing

Only qualified technicians should repair your notebook. Unauthorised opening or incorrect repair may greatly endanger the user (electric shock, fire risk) and will invalidate your warranty.

After consulting the Hotline/Service Desk, you may remove and install the components described in this chapter yourself.

If you remove and install components without consulting the Hotline/Service Desk, then the warranty of your notebook will be voided.

## Notes on installing and removing boards and components

- Switch the notebook off and pull the power plug out of the mains socket.
- Always remove the battery.
- Take care when you use the locking mechanisms on the battery and any other component.
- Never use sharp objects such as screwdrivers, scissors or knives as leverage to remove covers.

Boards with electrostatic sensitive devices (ESD) are marked with the label shown.

When handling boards fitted with ESDs, you must always observe the following points:

- You must always discharge static build up (e.g. by touching a grounded object) before working.
- The equipment and tools you use must be free of static charges.
- Remove the power plug from the mains supply before inserting or removing boards containing ESDs.
- Always hold boards with ESDs by their edges.
- Never touch pins or conductors on boards fitted with ESDs.

# Preparing to remove components

If you are going to remove or change system components, prepare for the removal as follows:

Please observe the safety information in chapter "Important notes", Page 12.

Remove the power plug from the mains outlet !

► Switch the device off.

The device must not be in energy-saving mode !

► Close the LCD screen.
► Remove all the cables from the device.
► Turn the device over and place it on a stable, flat and clean surface. If necessary, lay an anti-slip cloth on this surface to prevent the device from being scratched.
► Remove the battery (see "Removing a battery", Page 32).

# Installing and removing memory expansion

If you are asked by the Hotline/Service Desk to remove and install the memory expansion yourself, proceed as follows:

Please observe the safety information in chapter "Important notes", Page 12.

When installing/removing memory modules, the battery must be removed from the notebook and the notebook must not be connected to the power supply, see "Preparing to remove components", Page 58.

Only use memory expansion modules that have been approved for your notebook (see "Technical data", Page 79).

Never use force when installing or removing a memory extension.

Make sure that foreign objects do not fall into the memory extension compartment.

You must open the service compartment to remove or install a memory module. On some devices, opening the compartment may expose other components. These components should be removed and replaced only by authorised specialists. Therefore, be sure to observe the following:

Individual components can become very hot during operation. Therefore, we recommend that you wait one hour after switching off the notebook before removing or installing memory modules. Otherwise, there is a risk of suffering burns!

As some components are exposed that are sensitive to static electricity, please take note of chapter "Notes on installing and removing boards and components", Page 57.

## Removing a cover

► Prepare for removal, see "Preparing to remove components", Page 58.

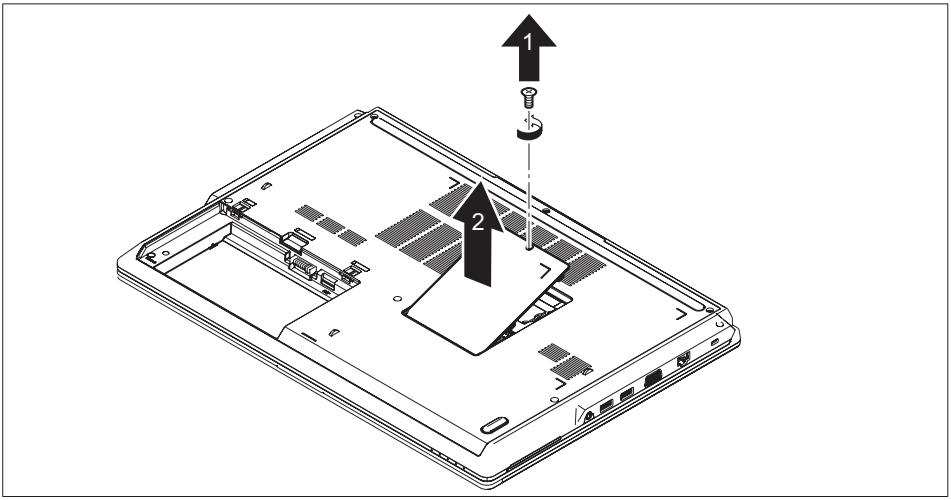


► Remove the screw (1).

Keep the screw in a safe place.

► Lift the cover off the notebook (2).

## Removing memory modules

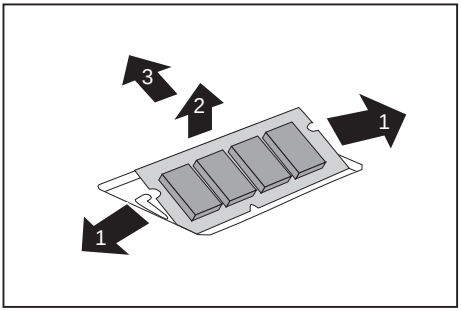


► Carefully push the two mounting clips outwards (1).

↳ The memory module snaps upwards (2).

► Pull the memory module out of its slot in the direction of the arrow (3).

## Installing a memory module

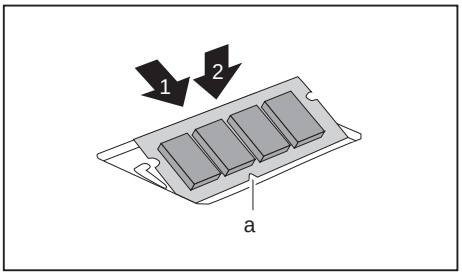


- ► Insert the memory module with the contacts and the recess (a) facing the slot (1).
- ► Carefully push the memory module downwards until you feel it click into place (2).

## Attaching the cover

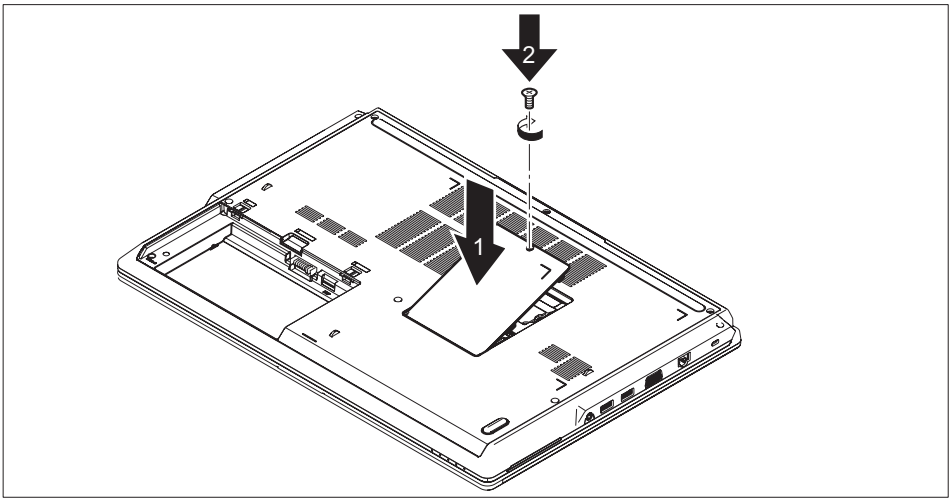


- ► Place the cover in the correct mounting position (1).
- ► Tighten the screw (2).
- ► Complete the installation, see "Finishing component removal", Page 67.

# Inserting and removing the hard disk (HDD) and M.2 module

The hard disk service compartment contains two installation spaces for standard hard disks (HDD) and one installation space for an M.2 module.

## Removing a cover

- Remove the cover of the memory service compartment; see "Removing a cover", Page 59.

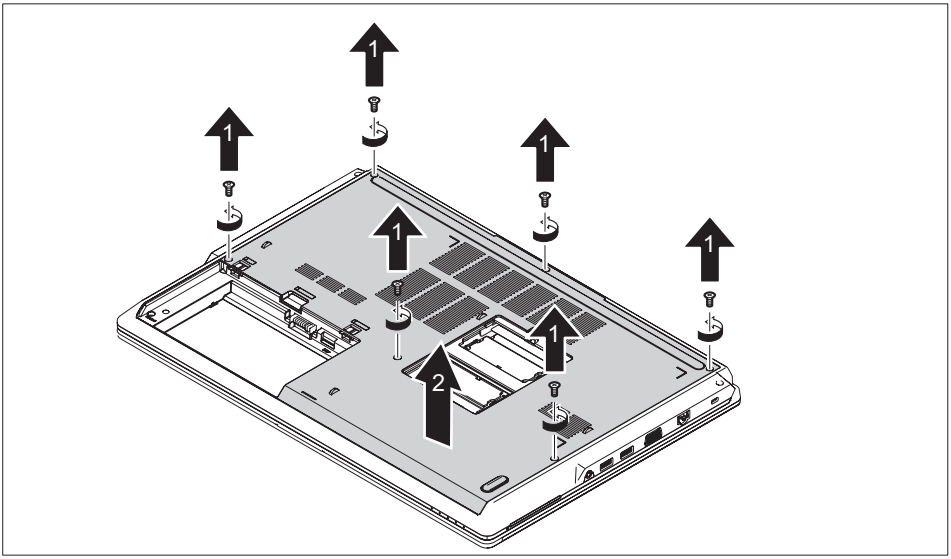


► Remove the screws (1).

Keep the screws in a safe place. If you are removing more than one component at the same time, store the screws for the individual components separately from each other. If you install the wrong screws, components may be damaged.

The screws are not all the same length and when the cover is installed, the correct screws must be used.

► Lift the cover off the notebook (2).

# Removing the hard disk (HDD)

The procedure is identical for both HDD type hard disks.

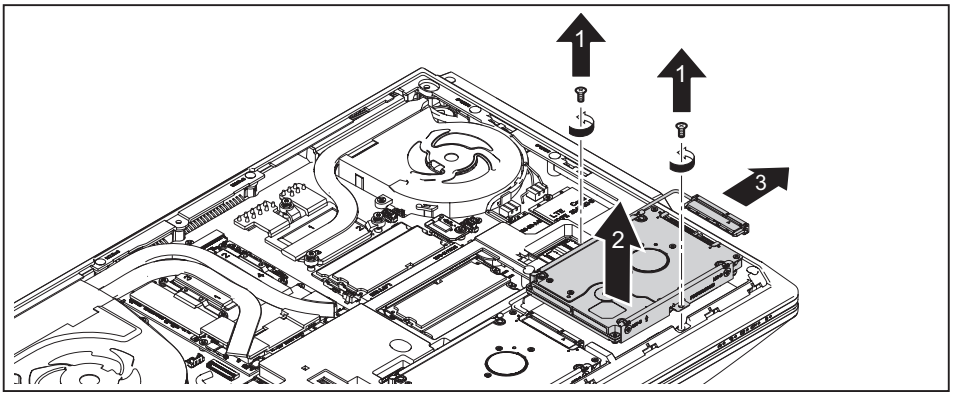


- ► Remove the screws (1).
- ► Gently lift out the hard disk (2).
- ► Loosen the connector of the hard disk (3).
- ► Remove the hard disk from the hard disk compartment.

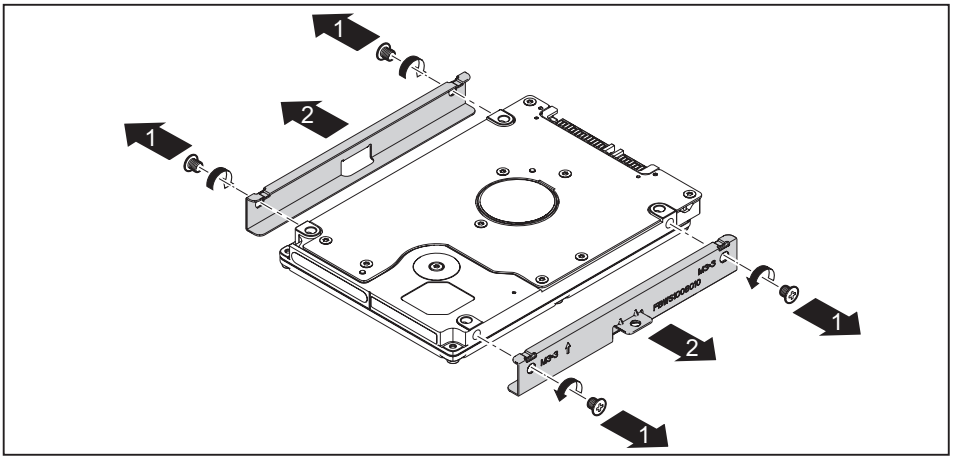


- ► Remove the screws (1).
- ► Disconnect the hard disk brackets from the hard disk (2).

## Inserting the hard disk (HDD)

Always install the hard disk into the device in the corresponding hard disk carrier.

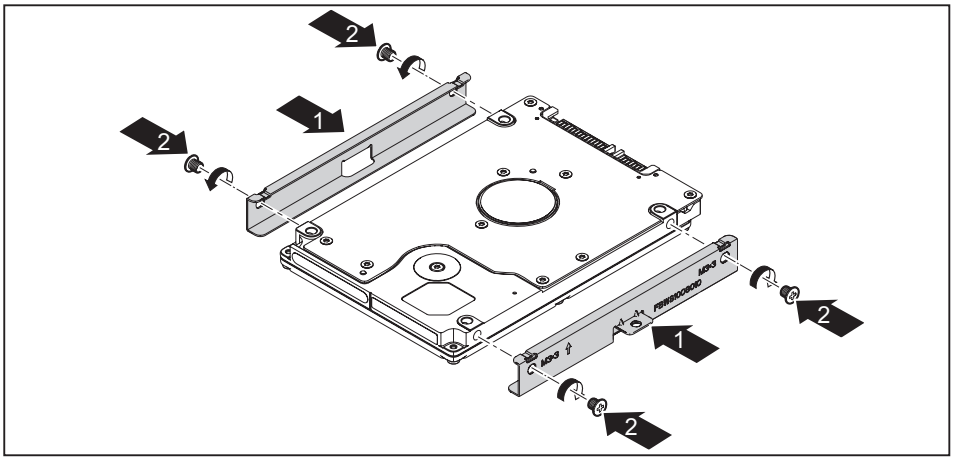


- ► Place the hard disk brackets on the hard disk (1).
- ► Tighten the screws (2).

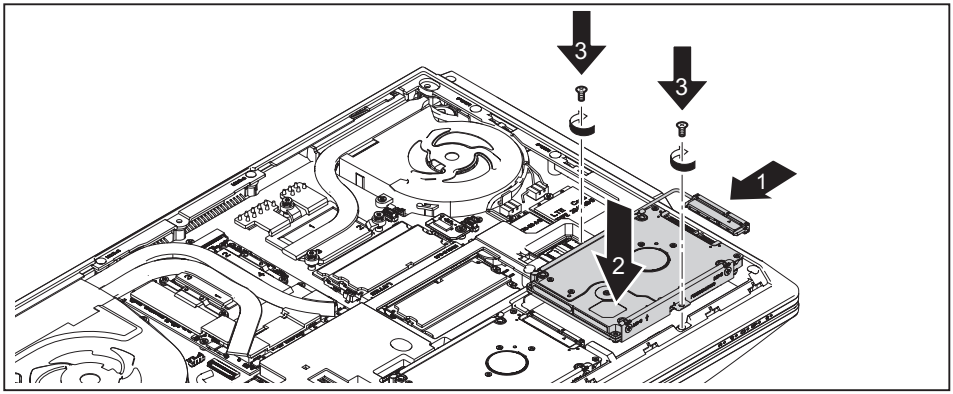


- ► Attach the connector to the hard disk (1).
- ► Place the hard disk into the hard disk compartment (2).
- ► Tighten the screws (3).
- ► Connect the hard disk connector to the mainboard.

## Removing the M.2-module (on mainboard)

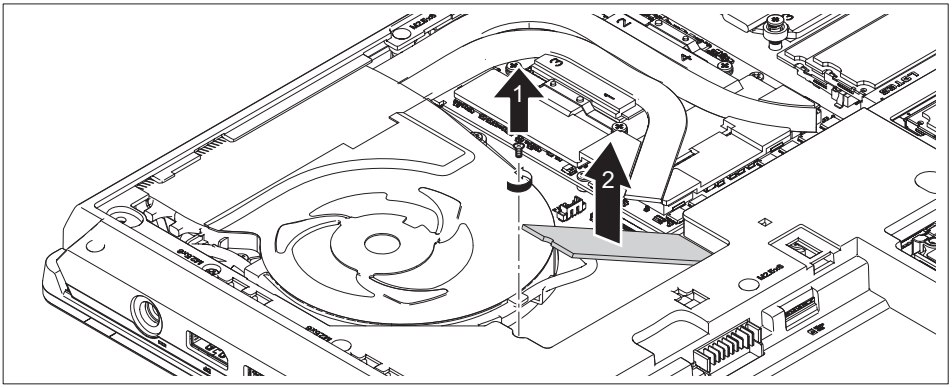


► Undo the screw (1).
↳ The M.2 module snaps slightly upwards.
► Pull the M.2 module in the direction of the arrow (2) and out of the slot on the mainboard and remove it from the casing.

## Insert M.2-module (on mainboard)

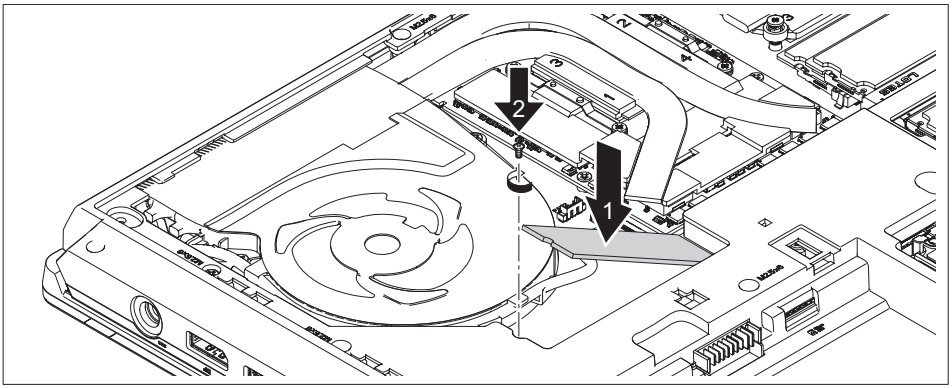


► Insert the M.2 module at a slight angle in the direction of the arrow (1) into the slot on the mainboard.
► Fasten the M.2 module in place in the slot with the screw (2).

# Removing the M.2 module (under hard disk)

► Remove the hard disk (HDD).

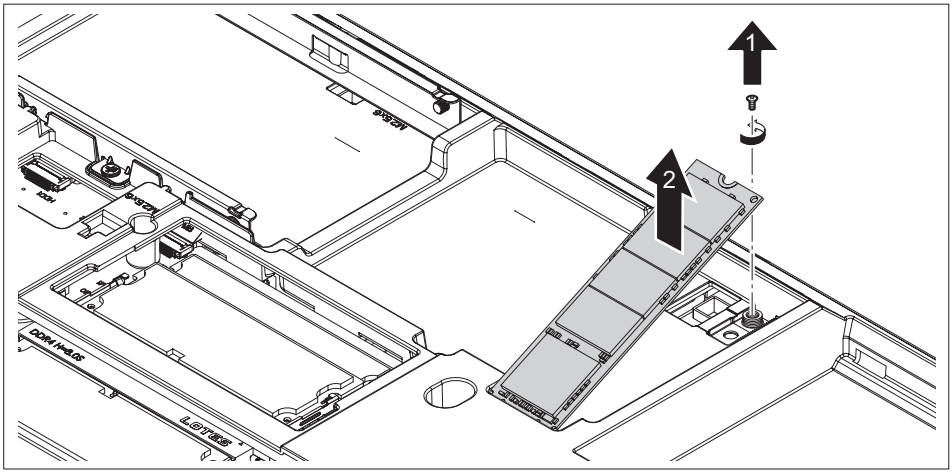


► Undo the screw (1).
► Carefully lift the M.2 module in the direction of the arrow (2).

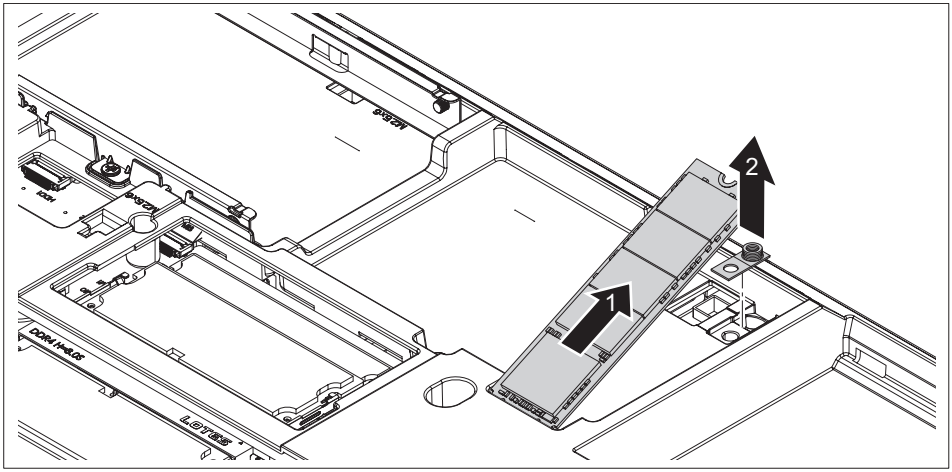


► Pull the M.2 module in the direction of the arrow (1) and out of the slot, and remove it from the casing.
► Remove the underlying plate (2).
► Keep the underlying plate together with the screws.

# Inserting the M.2 module (under hard disk)

► Remove the hard disk (HDD).

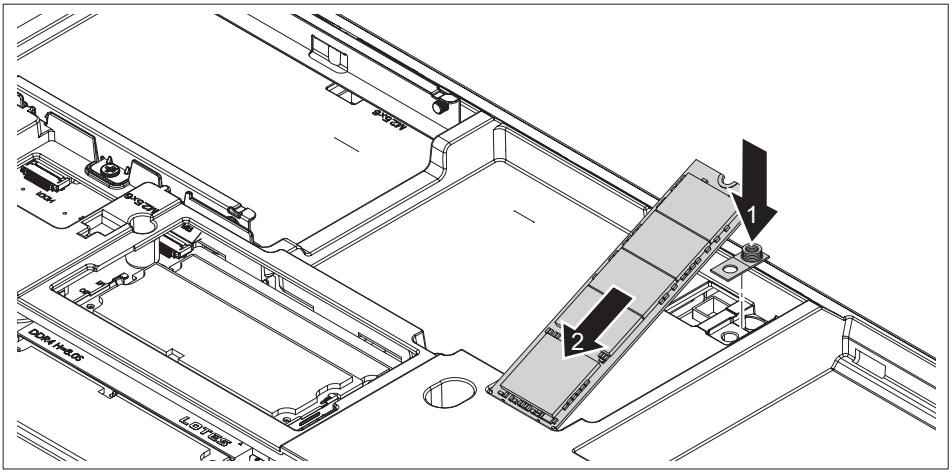


► Place the included underlying plate in the hard disk installation space (1).

► Insert the M.2 module at a slight angle in the direction of the arrow (2), under the hard disk installation space.

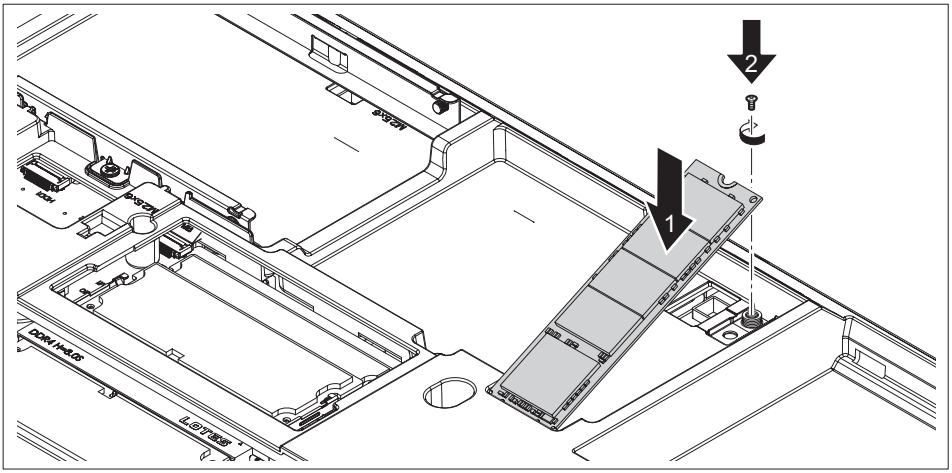


► Carefully push the M.2 module in the direction of the arrow (1).

► Fasten the M.2 module in place in the slot with the screw (2).

## Attaching the cover

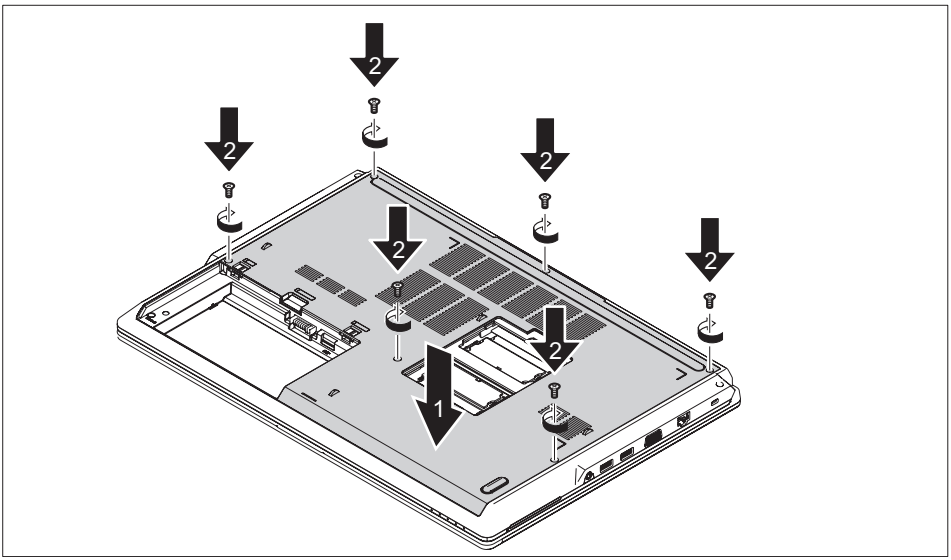


- ► Place the cover in the correct mounting position (1).
- ► Tighten the screws (2).
- ► Re-fasten the cover of the memory service compartment; see "Attaching the cover", Page 60.

# Finishing component removal

After you have removed or changed the system components as you required, please prepare your device for operation again as follows:

- ► Install the battery again (see "Installing a battery", Page 33).
- ► Turn the notebook the right way up again and place it on a flat surface.
- ► Reconnect the cables that you disconnected before.

# Settings in BIOS Setup Utility

The *BIOS Setup Utility* allows you to set the system functions and the hardware configuration for the notebook.

When it is delivered, the notebook is set to factory default settings. You can change these settings in *BIOS Setup Utility*. Any changes you make take effect as soon as you save and exit the *BIOS Setup Utility*.

The *BIOS Setup Utility* program contains the following menus:

| | |
|---|---|
| *About* | Displays information relating to the BIOS, processor and notebook |
| *System* | Advanced system settings |
| *Advanced* | Configuration of various hardware components, such as mouse, keyboard, processor |
| *Security* | Password settings and security functions |
| *Boot* | Configuration of the start-up sequence |
| *Exit* | Exits the *BIOS Setup Utility* |

## Starting the BIOS Setup Utility

► Reboot the device (switch off/on or reboot the operating system).

↳ Depending on the *Fast Boot* setting in the *BIOS Setup utility*, the following information may appear on the screen during start:

```
<F2> BIOS Setup <F12> Boot Menu
```

► Press the function key F2.

► If a password has been assigned, enter the password and press the Enter key.

If you have forgotten the password, contact your system administrator or contact our customer service centre.

The *BIOS Setup Utility* starts.

# Operating BIOS Setup Utility

Press the F1 key to display help on the operation of the *BIOS Setup Utility*. The description of the individual settings is shown in the right-hand window of the *BIOS Setup Utility*.

With the F9 key you can load the default settings of the *BIOS Setup Utility*.

- ► Use the cursor keys ← or → to select the menu you wish to access to make changes.
- ↳ The menu is displayed on the screen.
- ► Select the option you want to change with the cursor keys ↑ or ↓.
- ► Press the Enter key.
- ► Press the ESC key to exit the selected menu.
- ► For future reference, make a note of the changes you have made (for example, in this manual).

# Exiting BIOS Setup Utility

You need to select the desired option in the *Exit* menu and activate it by pressing the Enter key:

## Exit Saving Changes - save changes and exit BIOS Setup Utility

► To save the current menu settings and exit the *BIOS Setup Utility*, select *Exit Saving Changes* and *Yes*.

↳ The notebook is rebooted and the new settings come into effect.

## Exit Discarding Changes – Discard changes and exit BIOS Setup Utility

► To discard the changes, select *Exit Discarding Changes* and *Yes*.

↳ The settings in place when *BIOS Setup Utility* was called remain effective. *BIOS Setup Utility* is terminated and the notebook is rebooted.

## Load Setup Defaults – Copy Standard Entries

► To copy the standard entries for all menus of the *BIOS Setup Utility*, choose *Load Setup Defaults* and *Yes*.

## Discard Changes – Discard changes without exiting the BIOS Setup Utility

► To discard the changes you have made, select *Discard Changes* and *Yes*.

↳ The settings in place when *BIOS Setup Utility* was called remain effective. You can now make additional settings in the *BIOS Setup Utility*.

► If you want to exit*BIOS Setup Utility*with these settings, select *Exit Saving Changes* and *Yes*.

## Save Changes - save changes without exiting the BIOS Setup Utility

► To save the changes, select *Save Changes* and *Yes*.

↳ The changes are saved. You can now make additional settings in the BIOS Setup Utility.

► If you want to exit BIOS Setup Utility with these settings, choose *Exit Saving Changes* and *Yes*.

## Save Changes and Power Off

► To save the changes and switch off your device, select *Save Changes and Power Off* and *Yes*.

↳ The changes are saved. Your device is shut down.

# Troubleshooting and tips

Follow the safety notes in the "Safety/Regulations" manual when connecting or disconnecting cables.

If a fault occurs, try to correct it as described. If you fail to correct the problem, proceed as follows:

- ► Make a note of the steps and the circumstances that led to the fault. Also make a note of any error messages displayed.
- ► Switch the notebook off.
- ► Please contact the Hotline/Service Desk.

The telephone numbers can be found at: "http://support.ts.fujitsu.com/contact/servicedesk". Have the following information ready when you call:

- The model name and serial number of the notebook. The serial number is located on a sticker on the underside of the notebook.
- Notes of any messages that appear on the screen and information on acoustic signals.
- Any changes you have made to the hardware or software since receiving the notebook.
- Any changes you have made to the *BIOS Setup* settings since receiving the notebook.
- Your system configuration and all peripheral devices connected to your system.
- Your sales contract.

Our notebooks have been designed primarily with mobile applications in mind. This means that considerable effort has been made to optimise components and equipment in terms of weight, space and energy requirements. Depending on the particular configuration you have purchased, it is possible that functionality may be slightly reduced compared to a desktop PC if you are running processor-intensive gaming software, e.g. games with intensive 3D graphics. Updating your hardware with drivers which have not been approved by Fujitsu Technology Solutions may result in performance losses, data losses or malfunction of the equipment. A list of approved drivers and current BIOS versions can be downloaded from: "http://support.ts.fujitsu.com/Download/Index.asp"

## Help if problems occur

Should you encounter a problem with your computer that you cannot resolve yourself:

- ► Note the ID number of your device. The ID number is found on the type rating plate on the back or underside of the casing.
- ► Contact the Service Desk responsible for your country for clarification of the problem: "http://support.ts.fujitsu.com/contact/servicedesk". When you do this, please have ready the ID number and serial number of your system.

# Restoring the hard disk contents under Windows

To perform the following steps, you must connect an external optical drive (available as an option) to the device.

You can use the "Windows Recovery CD" (optionally available) and the "Drivers & Utilities CD/DVD" to reinstall the operating system.

The instructions are provided on the case of the Recovery CD.

During the reinstall process your personal files and any installed programs will be deleted. We advise you to backup your files to an external hard drive, or CD / DVD disk before you start.

- ► Switch the notebook on.
- ↳ Depending on the *Fast Boot* setting in the *BIOS Setup utility*, the following information may appear on the screen during start:
  *<ESC>Diagnostic screen <F12>Boot Menu <F2>BIOS Setup*
- ► When this message appears, press the function key F12.
- ► Insert the "Windows Recovery CD" into the optical drive.
- ► Select *CD-ROM* and press the Enter key.
- ► Follow the instructions on the screen.
  After the installation you must install all the drivers again. Some installed hardware components will not be correctly supported until this has been done.
- ► Insert the "Drivers & Utilities" CD/DVD into the optical drive. The CD starts automatically.
- ► Click on the *Desk Update* button.
- ► Select *Automatic driver installation (Express)* and click on *Start installation*.
- ► Follow the instructions on the screen.
- ► Restart your notebook when the driver installation is completed.

# The notebook’s date or time is incorrect

| Cause | Troubleshooting |
|---|---|
| Time and date are incorrect. | ► With the *BIOS-Setup-Utility*, you can set the date and time in the *main* menu. |
| If the time and date are still set incorrectly after switching on the notebook. | ► Please contact your sales outlet or our Hotline/Service Desk. |

# The notebook’s LCD screen remains blank

| Cause | Troubleshooting |
|---|---|
| Monitor is switched off. | ► Press a key or touch the touchpad. |
| External monitor or television set connected. | ► Press the key combination to switch the screen output, see "Key combinations", Page 24. |

# The LCD screen is difficult to read

| Cause | Troubleshooting |
|---|---|
| Reflected glare | ► Turn the notebook or alter the tilt of the LCD screen.<br>► Increase the brightness of the screen. |

# The external monitor remains blank

| Cause | Troubleshooting |
|---|---|
| Monitor is switched off. | ► Switch the external monitor on. |
| Power saving has been activated (monitor is blank). | ► Press any key to continue. |
| Brightness is set to dark. | ► Adjust the brightness of the monitor. |
| Screen output is set to the notebook’s LCD screen | ► Press the key combination to switch the screen output, see "Key combinations", Page 24. |
| The external monitor’s power cable or data cable is not connected properly. | ► Switch off the external monitor and the notebook.<br>► Check whether the power cable is plugged properly into the external monitor and into the power socket.<br>► Check whether the data cable is properly connected to the notebook and the external monitor (if it is plugged in with a connector).<br>► Switch on the external monitor and the notebook. |

# The external monitor is blank or the image is unstable

| Cause | Troubleshooting |
|---|---|
| The wrong external monitor has been selected or the wrong screen resolution has been set for the application program. | ► Terminate the application program in Windows by pressing Alt + F4. If the fault persists after closing the program, use the key combination for switching the screen output (see "Key combinations", Page 24) to switch over to the notebook's LCD screen. Change the following setting:<br>► Set the screen resolution: Set the screen resolution as described in the documentation for your operating system.<br>► Select monitor: Select monitor 1 or 2 as described in the documentation for your operating system. |

# The notebook cannot be started

| Cause | Troubleshooting |
|---|---|
| The battery is not installed correctly. | ► Check whether the battery is installed correctly in its compartment.<br>► Switch the notebook on. |
| The battery is dead. | ► Charge the battery.<br>**or**<br>► Insert a charged battery.<br>**or**<br>► Connect the mains adapter to the notebook. |
| The power adapter is not connected correctly. | ► Check whether the mains adapter is connected correctly to the notebook.<br>► Switch the notebook on. |

# The notebook stops working

| Cause | Troubleshooting |
|---|---|
| Notebook is in energy saving mode. | ► Leave energy saving mode. |
| An application programme has caused the malfunction. | ► Close the application program or restart the notebook (by restarting the operating system or switching the device off and back on again). |
| The battery is dead. | ► Charge the battery.<br>**or**<br>► Insert a charged battery.<br>**or**<br>► Connect the mains adapter to the notebook. |

# The printer does not print

| Cause | Troubleshooting |
|---|---|
| The printer is not switched on. | ► Make sure that the printer is switched on and ready for operation (refer to the documentation supplied with the printer). |
| The printer is not connected correctly. | ► Check that the data cable connecting the notebook to the printer is properly connected. |
| The printer driver is faulty or not correctly installed, or it is the wrong printer driver. | ► Check that the data cable connecting the notebook to the printer is properly connected.<br>► Check whether the correct printer driver is loaded (refer to the printer documentation). |

# The wireless connection to a network does not work

| Cause | Troubleshooting |
|---|---|
| The wireless component is disabled. | ► Switch the wireless component on (see "Switching the wireless components on and off", Page 39). |
| The wireless component is enabled. Despite this, the wireless connection to a network does not work. | ► Check whether the wireless connection is switched on via the software.<br>► Further information on using the wireless component can be found in the help files. |

## Acoustic warnings

| Cause | Troubleshooting |
|---|---|
| A beep sounds every few seconds.<br>The battery is almost flat. | ► Charge the battery. |

## SmartCard reader is not recognised.

| Cause | Troubleshooting |
|---|---|
| Chip card inserted incorrectly. | ► Make sure you have inserted your SmartCard into the SmartCard reader with the chip facing upwards/downwards (device-dependent).<br>► Check whether the SmartCard you are using is supported. Your SmartCard must comply with the ISO standard 7816-1, -2, -3 and -4. |

## SmartCard PIN forgotten

| Cause | Troubleshooting |
|---|---|
| PIN forgotten | ► If you are working in a network, contact your system administrator, who can unlock your notebook with a Supervisor PIN. |

## SmartCard lost

| Cause | Troubleshooting |
|---|---|
| SmartCard lost | ► If you are working in a network, contact your system administrator, who can boot up your notebook with a Supervisor SmartCard. |

# Error messages on the screen

This section describes the error messages generated by the BIOS Setup. Error messages displayed by the operating system or programmes are described in the relevant documentation.

If the error message appears repeatedly, despite troubleshooting measures, please contact the place of purchase or our customer service centre.

| Error message/cause | Resolution |
|---|---|
| *CMOS battery bad*<br>If the error message occurs repeatedly, the buffer battery in the notebook is flat. | ► Contact your sales outlet or our customer service centre. |
| *System CMOS checksum bad - default configuration used*<br>The system configuration information is incorrect. | ► Switch the notebook off.<br>► Switch the notebook on.<br>► Press the function key F2 to access the *BIOS Setup*.<br>► In the *BIOS Setup*, select the *Exit* menu.<br>► Select the entry *Load Setup Defaults*.<br>► Select *OK* and press the Enter key. |
| *Extended memory failed at offset: xxxx Failing Bits: zzzz zzzz*<br>When testing the extended memory an error has resulted at the address xxxx. | ► Check whether the additional memory module has been inserted correctly. |
| *Failure Fixed Disk n*<br>The settings of the hard disk drive are incorrect. | ► Start the *BIOS Setup* (*Primary Master* submenu) and select the correct settings. |
| *Keyboard controller error* | ► Switch the notebook off using with the ON/OFF button.<br>► Wait 3 - 5 seconds and switch on the notebook again. |
| *Keyboard error* | If you are using an external keyboard:<br>► Check the connection and reboot the notebook. |
| *nn Stuck key* | ► Make sure that no key is pressed. |
| *Operating system not found* | ► Check in the *BIOS Setup* whether your hard disk has been set correctly.<br>► Make sure that the operating system is installed on the corresponding drive. |
| *Press <F1> to resume, <F2> to SETUP*<br>This error message appears if an error occurs during the self-test before starting the operating system. | ► Press the F1 function key to start the operating system.<br>► Press the function key F2 to access the *BIOS Setup*. |

| Error message/cause | Resolution |
|---|---|
| *Previous boot incomplete - Default configuration used* Due to an error during the previous system boot, default values were used for certain settings. Check the settings in the BIOS Setup. | ► Press the F1 function key when prompted to do so. |
| *Real time clock error* | ► Contact your sales outlet or our customer service centre. |
| *nnnnK Shadow RAM failed at offset: xxxx Failing Bits: zzzz* | ► Contact your sales outlet or our customer service centre. |
| *System battery is dead - Replace and run SETUP* | ► Contact your sales outlet or our customer service centre. |
| *System cache error - Cache disabled* | ► Contact your sales outlet or our customer service centre. |
| *System timer error* | ► Contact your sales outlet or our customer service centre. |

# Technical data

## Notebook computer

| | CELSIUS H790 |
|---|---|
| **Ambient conditions** | |
| Operating temperature | 5 °C .... 35 °C / 41°F .... 95°F |
| Temperature in transit | -15 °C .... 60 °C / 5°F .... 140°F |
| **Dimensions** | |
| Width x depth x height (without rubber feet) | 418 mm x 288 mm x 30 mm / 16.46 inch x 11.34 inch / 1.18 inch |
| Weight | from 3.3 kg / 7.28 lbs |
| **Main memory** | |
| Slots | 2 slots 260 pin DDR4 - 2133 SO-DIMM with a total of max. 32 GByte |
| Approved memory modules | 8 GB or 16 GB DDR4 – 2133 SO-DIMM |

The data sheet for the device provides further technical data. You will find the data sheet on your device or on the Internet at "http://www.fujitsu.com/fts/support/".

## Rechargeable battery

You can find information on the batteries used in your device on the Internet at "http://www.fujitsu.com/fts/support/".

| | 8-cell battery 96 Wh |
|---|---|
| Rated voltage | 14.4 V |
| Rated capacity | 6700 mAh |

## Mains adaptor (notebook computer)

| Electrical data | |
|---|---|
| Primary | 250 W |
| Rated voltage | 100 V – 240 V (automatic) |
| Rated frequency | 50 Hz – 60 Hz (automatic) |
| Secondary | |
| Rated voltage | 19.5 V |
| Max. rated current | 13 A |

An additional mains adapter or power cable can be ordered at any time.

# Mains adaptor (port replicator)

| Electrical specifications | |
|---|---|
| Nominal power | 65 W |
| Rated voltage | 19 V |
| Maximum rated current | 3.42 A |

An additional mains adapter or power cable can be ordered at any time.

# Manufacturer’s notes

## Disposal and recycling

You can find information on this subject on your notebook or on our website ("http://www.fujitsu.com/fts/about/fts/environment-care/").

## Certification markings

Certification markings are listed as applicable in the "Manual Appendix - Additional Certifications" supplement.

If such markings are available, you can find the supplement on the Internet at "http://support.ts.fujitsu.com/Manuals/" with the Operating Manual for your device.

# Index

**A**
Acoustic error messages 76
Alt + Tab 25
Anti-theft protection 45
Application keys 26
Audio devices, connecting 55
Audio ports 55–56

**B**
Back tab 25
Backspace 23
Battery
  battery life 31
  caring for and maintaining 31
  charge level 31, 34
  charging 31
  self-discharge 31
  storage 31
Battery indicator 20
Battery status indicator
  see Battery indicator 20
Battery status meter 31
Battery symbol
  see Battery indicator 20
BIOS Setup Utility
  calling 68
  exiting 70
  operating 69
  protecting with password 46
  settings 68
Bluetooth, safety notes 13
Board 57
Buttons 22

**C**
Caps Lock 23
  indicator 20
Certification markings 81
Charging capacity, battery 31
Cleaning 15
Components
  installing / removing 57
Configuration, BIOS Setup Utility 68
Connecting audio devices 55–56
Connecting headphones 55–56
Ctrl+Alt+Del 25
Cursor control 23
Cursor keys 23

**D**
Date is incorrect 72
Device
  setting up 17
Drive
  indicator 20

**E**
Energy
  energy saving 13
Energy saving 13
Energy saving mode
  leaving 75
Enter 23
Enter key 23
Error message:
  on the screen 77
Error messages on the screen 77
Errors
  Acoustic warnings 76
ESD 57
Ethernet LAN 40

**F**
Fault
  correction 71
Fingerprint sensor 44
  configure 44
First-time setup 16
Fn key 23
Fn+F10 25
Fn+F2 24
Fn+F3 24
Fn+F4 24
Fn+F6 25
Fn+F7 25
Fn+F8 25
Fn+F9 25

**G**
Getting started 16

**H**
Hard disk:
  restoring the contents 72
Hardware configuration 68

**I**
Important notes 12
Incorrect date/time 72
Indicator
Caps Lock 20
drive 20
Num Lock 20
Scroll Lock 20

**K**
Key combinations 24
Keyboard 22
cleaning 15
keyboard backlight
Activate 24
Deactivate 24

**L**
LCD screen
cleaning 15
decrease brightness 25
difficult to read 73
notes 29
reflected glare 73
remains blank 73
LCD screen is too dark 73
Life, battery 31
Line feed 23
Loudspeakers 36
switch off 24
switch on 24

**M**
Main memory
see Adding memory 58
Mains adapter
connecting 17
setting up 17
Mechanical backup 45
Memory card
handling 35
inserting 35
removing 35
Memory expansion
installing 60
removing 59
Memory module
important notes 58
installing 60
removing 59
Microphone 36
Microphone, connecting 55
Mobile operation 14
Monitor
connecting 51
drifting display 74
remains blank 73
Monitor port
see VGA connection socket 51

**N**
Notebook
before you travel 14
cannot be started 74
cleaning 15
stops working 75
switching off 21
transporting 14
using 19
Notebook, operation 19
Notes 12
boards 57
cleaning 15
disposal / recycling 81
energy saving 13
LCD screen 29
Safety 12
transport 14
Num Lock
indicator 20, 24
Numeric keypad 22
see Separate numeric keypad 24

**O**
Operating system
activating system protection 47
cancel system protection 47
protecting with password 47
Operating system, restoring 72

**P**
Packaging 16
Password
changing 46
entering 46
removing 47
Password protection 45
Port Replicator
Ports 41
Ports
Port Replicator 41
Power
power consumption 34
power-management features 34

Power-on indicator 20
Preparing for operation 17
Printer does not print 75

**R**
Rechargeable battery 31
see Battery 31
Removing memory
see Adding memory 58
Return 23

**S**
Safety notes 12
Screen
no screen display 74
Screen brightness
decrease 25
increase 25
Scroll Lock
indicator 20
Security functions 44
SystemLock 49
Security functions,
SmartCard 49
Security Lock 45
Selecting a location 17
Self-discharge, battery 31
Separate numeric keypad 24
Servicing 57
Setup
see BIOS Setup Utility 68
Shift 23
Shift + Tab 25
Shift key 23
Slot
Memory cards 35
Standby indicator 20
Status indicators 19
Supervisor password
changing 46
entering 46
removing 47
Switching on
the notebook 21
Switching on for the first time 18
System configuration 68
System expansion 58
see Adding memory 58
System settings, BIOS Setup Utility 68

**T**
Tab key 23
Technical data 79
Mains adapter 79
notebook 79
Technical specifications
Mains adaptor 80
The wireless connection to a network
does not work 75
Time not correct 72
Tips 71
Toggle output screen 25
Touchpad 24, 27
buttons 27
cleaning 15
executing commands 28
moving the pointer 27
selecting an item 27
switch off 24
Touchpad buttons 24
TPM 48
Transport
Transport damage 16
Transportation 14
Travel, notebook 14
Troubleshooting 71
Trusted Platform Module 48

**U**
USB charging function 54
USB connection with charging function
(USB Type-C™) 53
USB ports 52
User password
changing 46
entering 46
removing 47
Using the Kensington Lock Cable 45

**V**
VGA connection socket 51
Volume
decrease 25
increase 25
Volume control 36

**W**
Webcam 30
Windows key 23
Wireless component:
safety notes 13
Wireless LAN:
safety notes 13